Vhodno izhodne naprave

Laboratorijska vaja 13 - LV 5

CANBUS

Laboratorijska vaja 13 - LV5

- 13.0: CANBUS osvežitev
- 13.1 Opis primera : Cybrotech CANBUS sistem
- 13.2: Krmiljenje Cybrotech IEX-2 modulov
- 13.3: CANBUS meritve
- 13.4: STM32 – osnovni IEX-2 modul

2. CANBUS vodilo

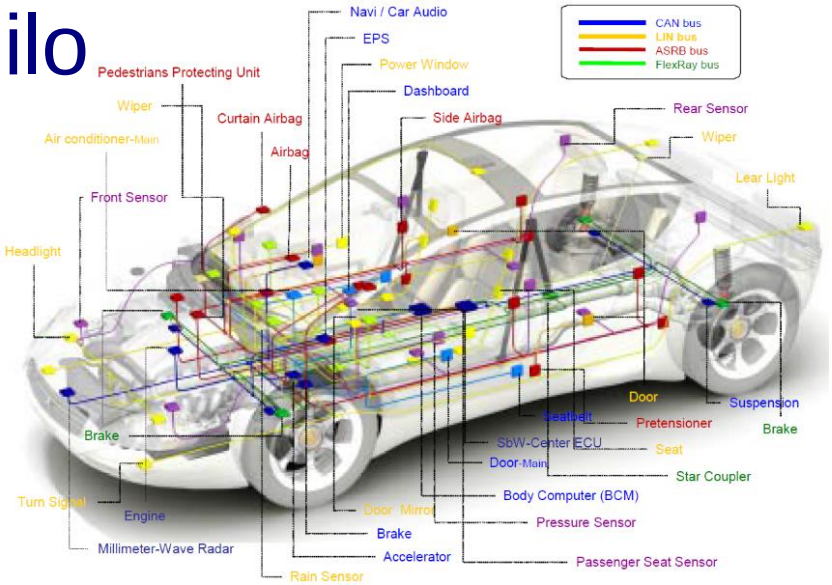

CANBUS (ISO-11898-2):

- Zgodovina
- Področja uporabe
  - Avtomobilska industrija
  - Industrijska avtomatika, pametne stavbe
- Pregled protokola, arbitraže, fizičnega nivoja
- Praktični primer: Pametna hiša, IEX-2 protokol

Lab. Vaja :

- Gradniki in shema testnega sistema
- Programiranje sistema
- Meritve signalov na povezavah

Zakaj vodilo ?

Primera povezav brez (levo) in z (desno) CANbus vodilom

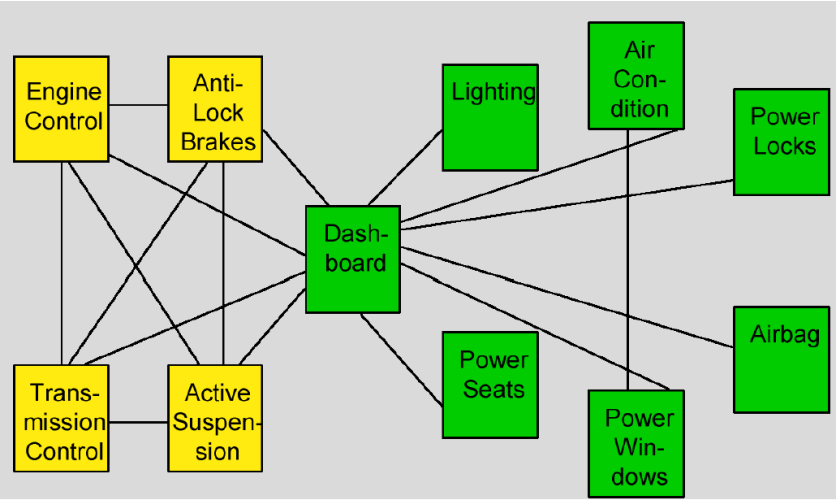

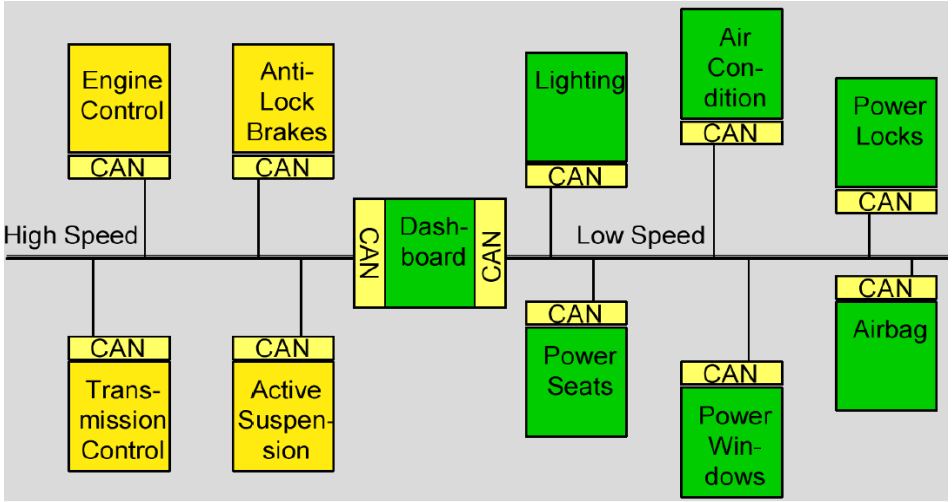

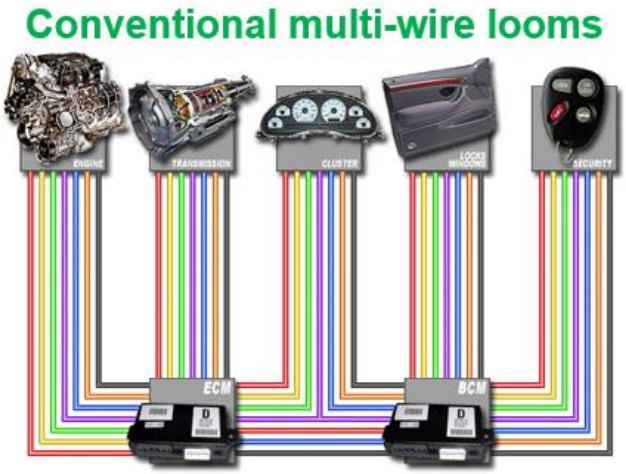

vs.

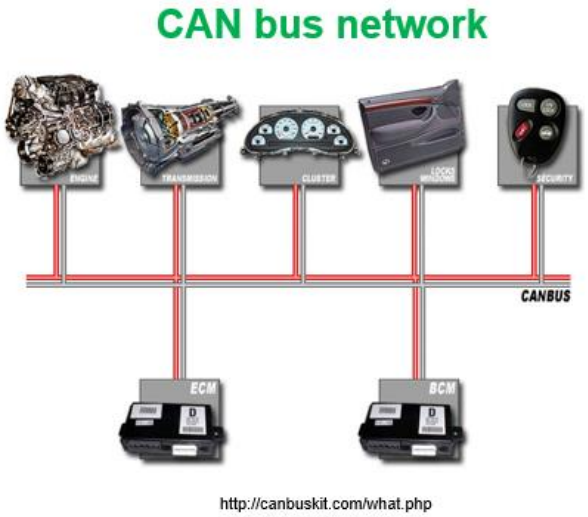

CANbus na kratko

- CANbus – **C**ontroller **A**rea **N**etwork bus
- CAN (Controller Area Network) je serijsko vodilo za komunikacijo med vgrajenimi mikrokrmilniki
- CAN bus na kratko :
  - serijsko vodilo
  - dve žici (CAN_H,CAN_L) + napajanje,
  - diferencialni prenos signala
    - odpornost na šum.
  - max 1Mbit/s, 40m,
  - sporočila do 8 bajtov (latenca)
- CAN-FD standard, ISO 11898-2:2016
  - 2Mbps, 5Mbps

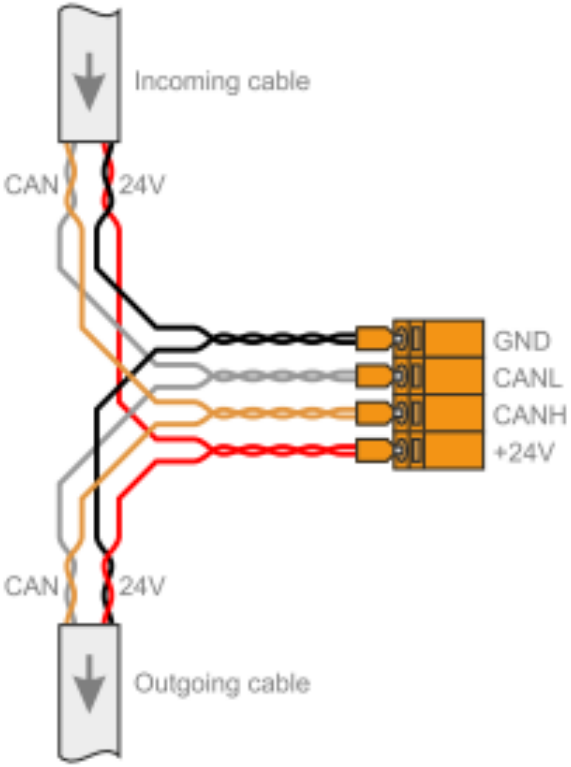

CANbus na kratko

- Prenos podatkov
  - Format okvirja
  - Protokol – sporočilno naravnan
  - Detekcija napake
    - Nivo Bitov (branje, „bit stuffing“)
    - Nivo sporočila (CRC, okvir, ACK napake)

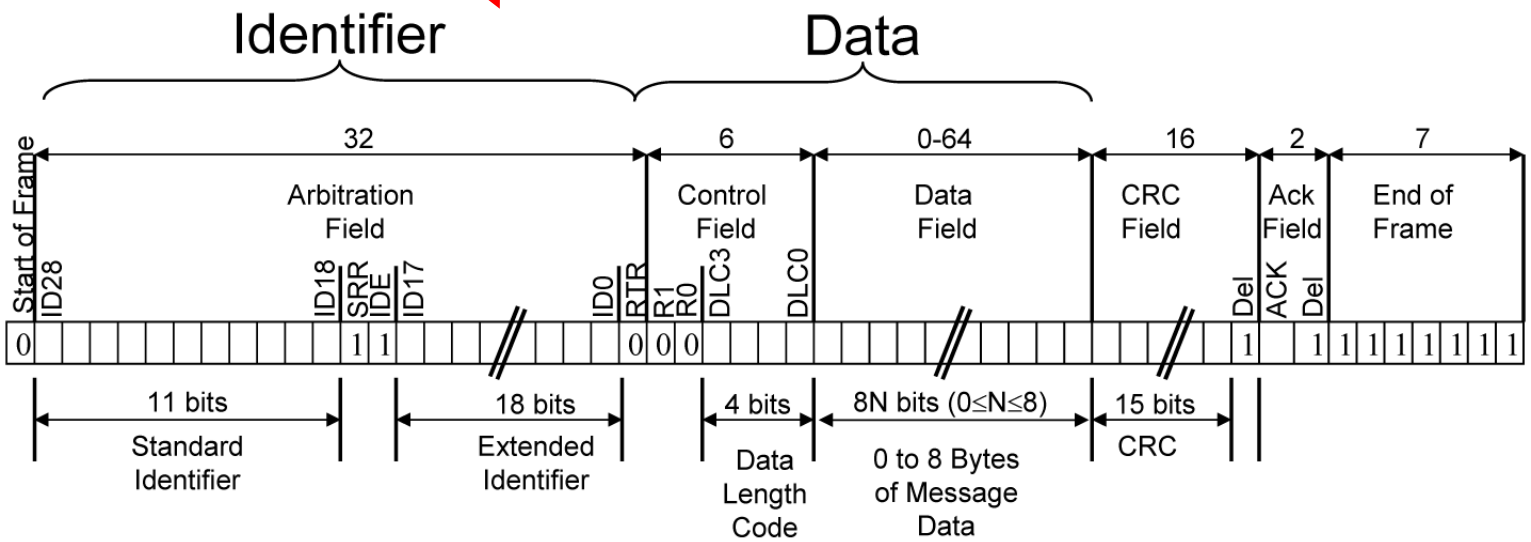

CANbus napetostni nivoji ISO-IS 11898

- Diferencialni prenos običajno na parici - Non-Return To Zero (NRZ) in bit-stuffing.
- Wired – AND povezava: vozlišče z logično 0 prevlada
  - 0 .. „dominant“, 1.. „recessive“)

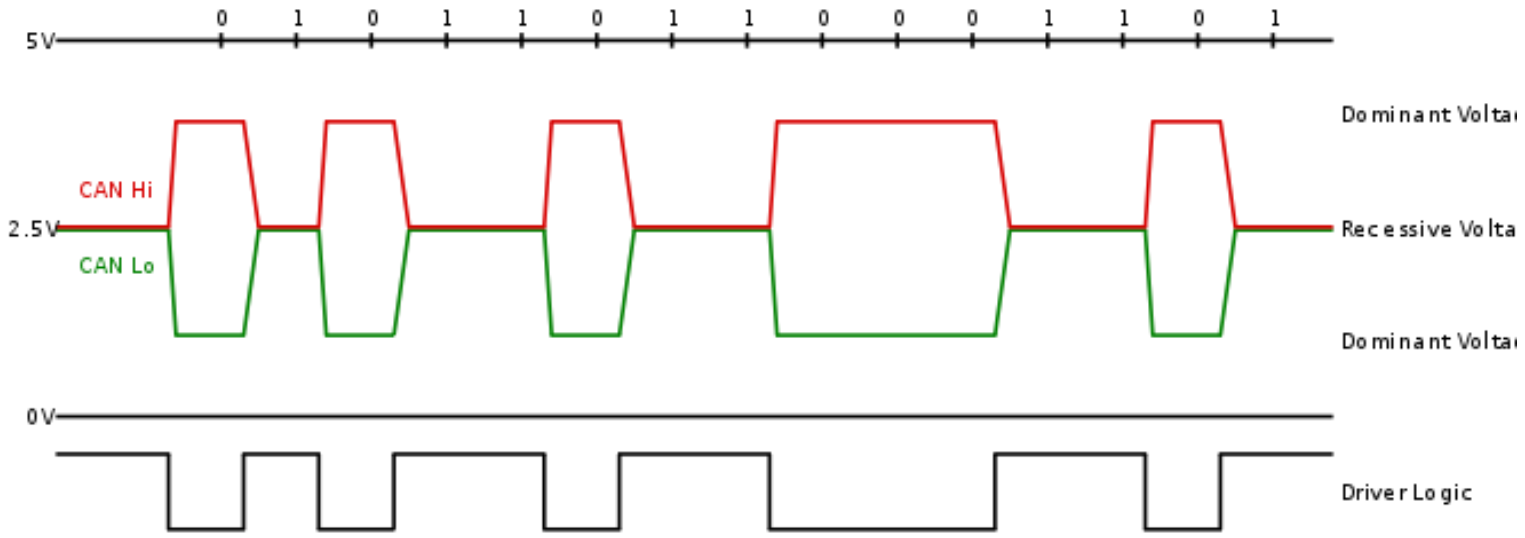

CANbus napetostni nivoji ISO-IS 11898

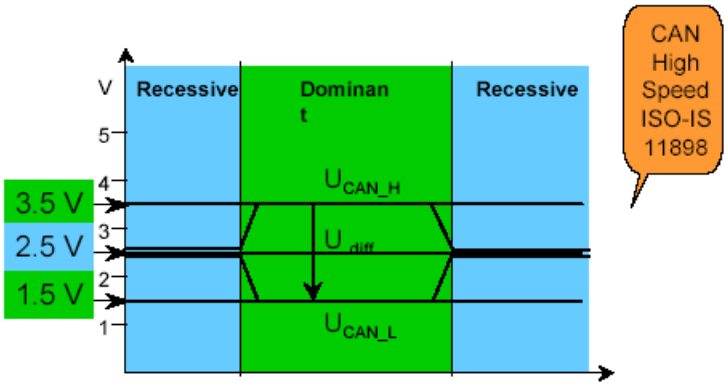

- Recesivni bit „1“:
  - obe liniji na približno 2.5V
  - diferencialna napetost CAN_H in CAN_L ≈ 0 V

- Dominantni bit „0“:
  - CAN_H na pribl. 3.5 V in CAN_L pribl. 1.5 V
  - diferencialna napetost CAN_H in CAN_L ≈ 2 V

Format sporočila

- Vsako sporočilo ima ID, podatke in dodatke
- ID - 11 ali 29 bitov
- Data - do 8 bajtov
- Dodatki - start (SOF), CRC, ACK, end (EOF)

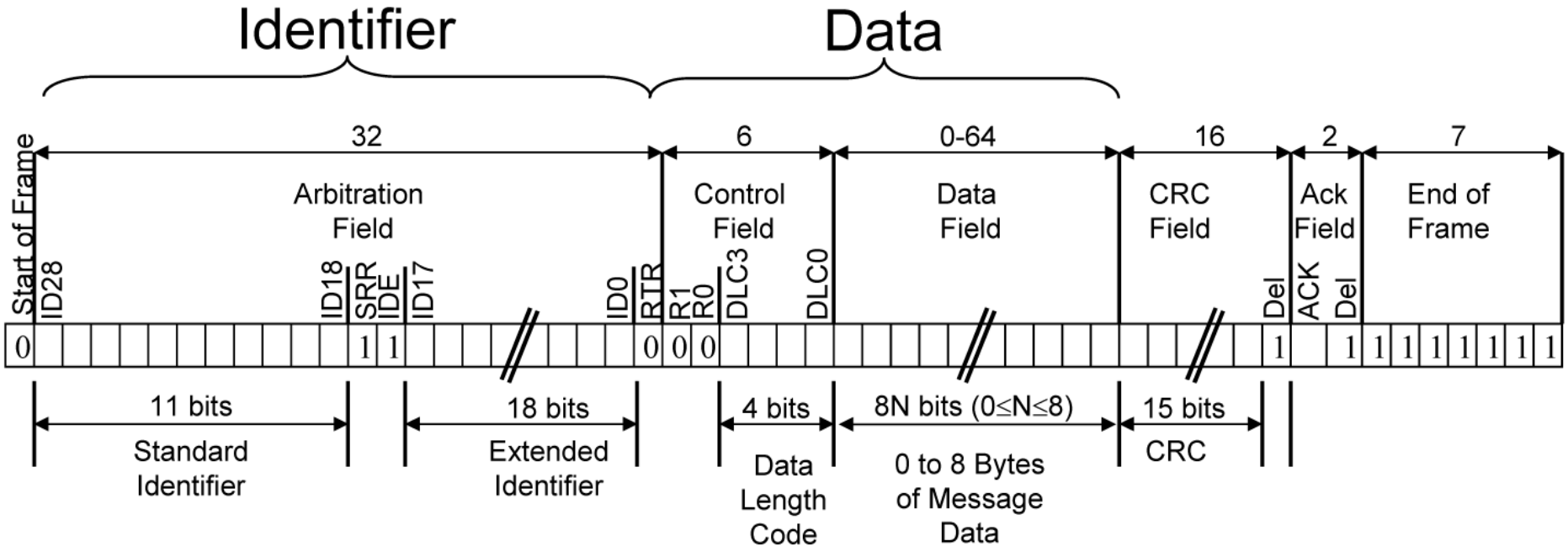

Format sporočila

CAN vs. RS-485: Why CAN Is on the Move

By Robert Gee, Executive Business Manager, Core Products Group, Maxim Integrated

Field Name	Bit Length	Description
SOF	1	Start of frame
Identifier (green)	11/29; 12/32	Represents the message priority (11 or 29 bits for standard CAN and extended CAN; 12 or 32 bits for CAN-FD)
RTR (blue)	1	Remote transmission request
IDE	1	Identifier extension bit
r0	1	Reserved bit for future protocol expansion
DLC (yellow)	4/8/9	Code for number of data bytes (4-bit for standard CAN; 8 or 9 bits for CAN-FD)
Data Field (red)	0–64 (0–8 bytes); 0–512 (0–64 bytes)	Data to be transmitted (0–8 bytes for standard CAN; 0–64 bytes for CAN-FD)
CRC	15	Cyclic redundancy check
CRC Delimiter	1	Assigned recessive (1)
ACK slot	1	Dominant bit if error-free message; recessive to discard errant message
ACK Delimiter	1	Acknowledgement delimiter
EOF	7	End of frame

Table 1. CAN Message Data-Frame Format

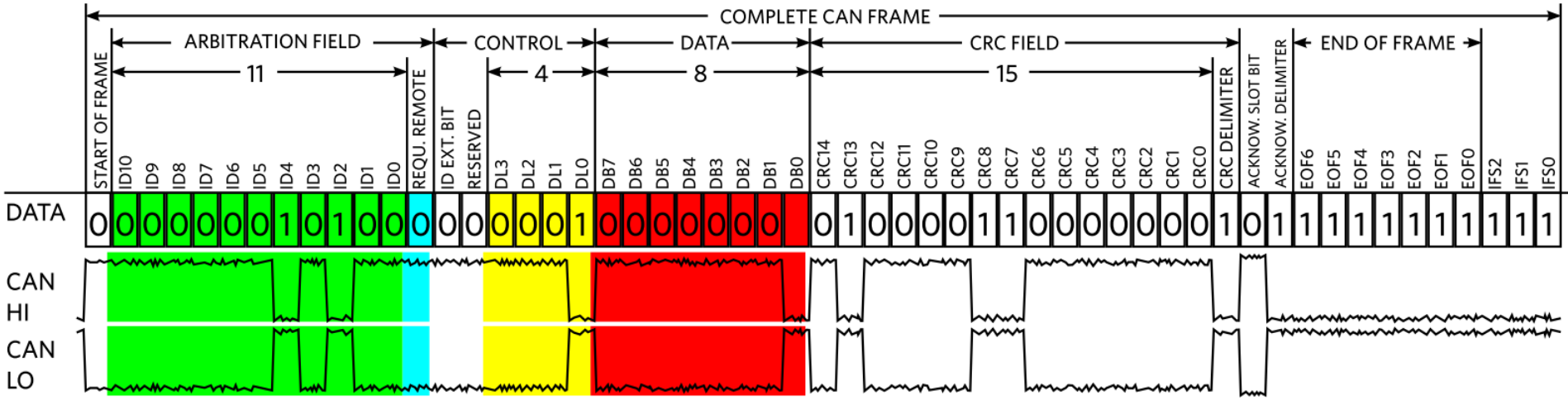

Figure 4. CAN Message Data-Frame Format

Arbitraža (Non-Destructive Arbitration)

- Pomembnos sporočila je določena z IDjem

  Nižja vrednost = Višja pomembnost
- Naprava odda in hkrati bere
  - “0” na vodilu prevlada “1” na vodilu
- Naprava:
  - odda “1” in bere “0” –> izguba artbitraže
  - odda in bere enako –> nadaljuje z oddajo

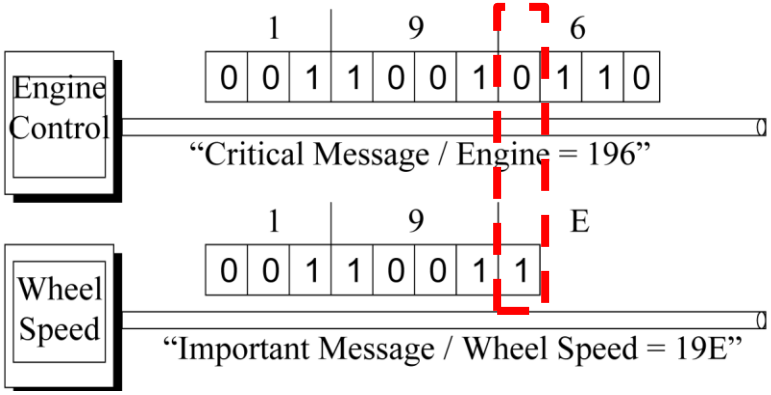

Wired AND (Arbitraža)

Stanje “0” (nizka napetost oz. dominantno stanje) na vodilu prevlada ostala stanja “1” (višja napetost oz. recesivno stanje) na vodilu.

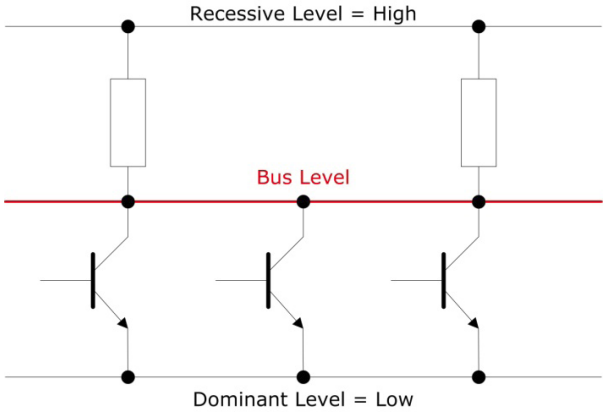

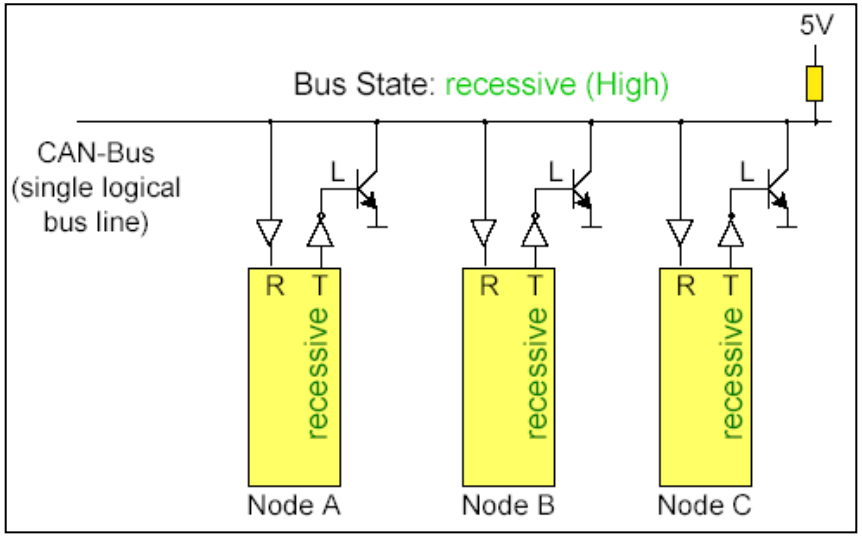

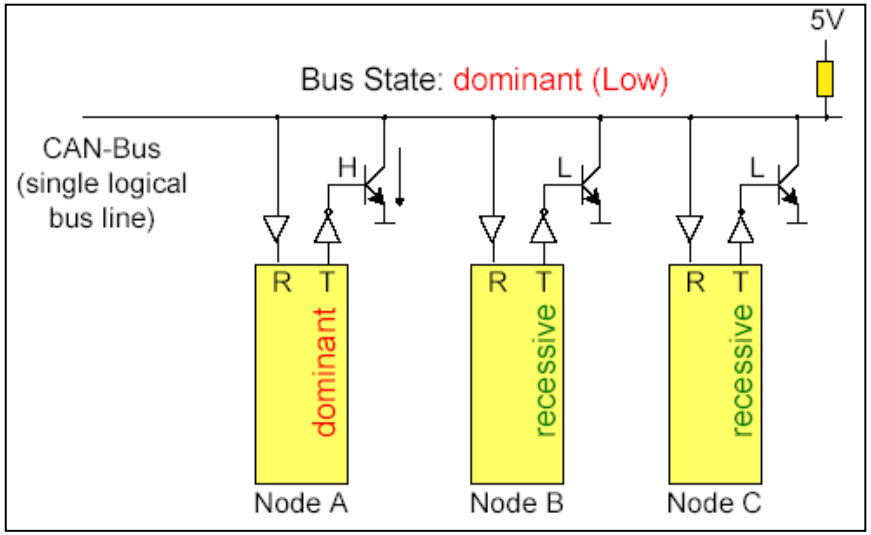

Osciloskop: primer CANbus komunikacije

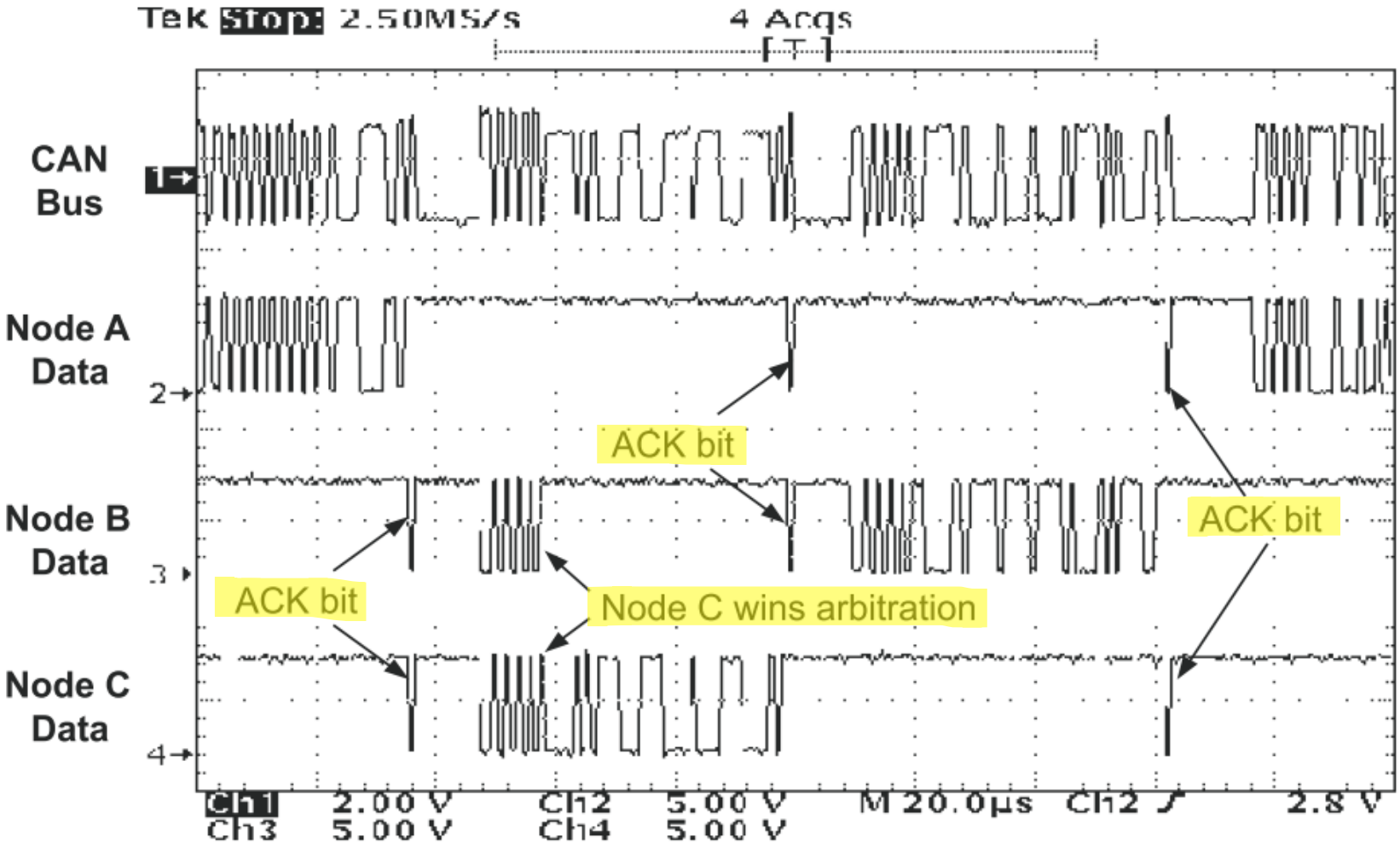

Figure 8. CAN Bus Traffic

Hitrost komunikacije

- Do 1 Mbit/sec.
- Standardne hitrosti: 1 MHz, 500 KHz and 125 KHz
- Max length: do 5000m, odvisno od:
  - hitrosti
  - lastnosti:
    - zaključitve, vrsta kabla, topologije, motenj, …

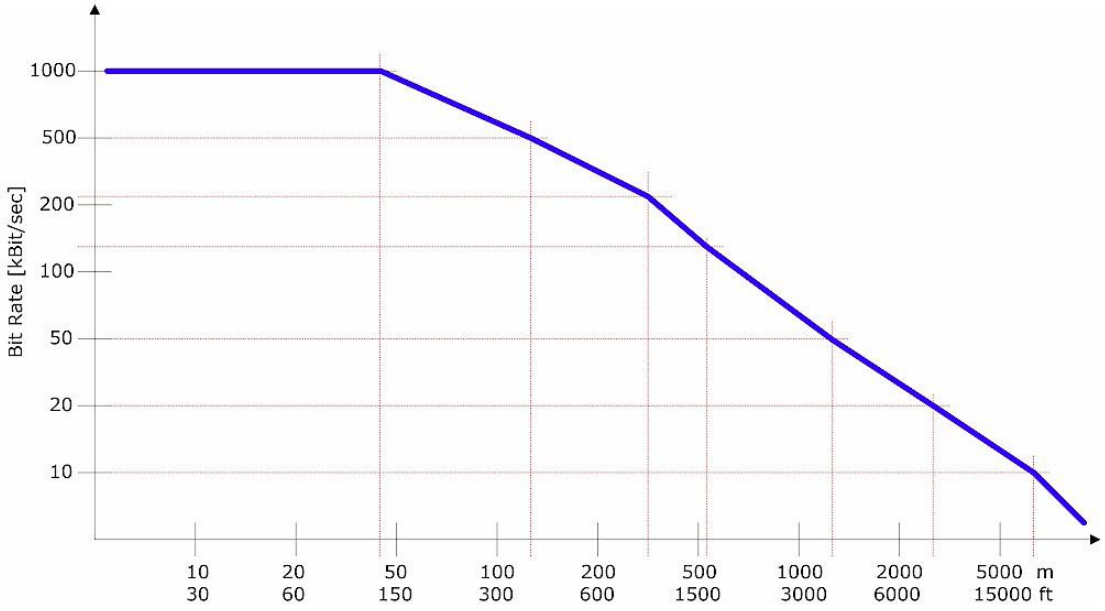

RS-485 vs CANBUS

Kako razrešiti ?

Podobno/enako:

- Diferencialni prenos
- Multi-master
- Zaključitev 120Ω
- Različno

Prednosti CANBUS :

- Multi-master oddajanje
  - CANBUS arbitraža
  - RS485 –konflikt, poraba toka, segrevanje
- Dodatna preverjanja (nivo sporočila)
  - CRC, format sporočila
- Dodatna preverjanja(bitni nivo)
  - Spremljanje stanja linije (poslano/sprejeto)
  - Potrditev (Acknowledge)
  - Bit-stuff (6. bit)

Prednosti RS485 :

- Višja hitrost – do 35Mbit/s
  - Obe stanji sta aktivno vodeni
  - CANBUS (Wired AND) ima recesivno in dominantno stanje

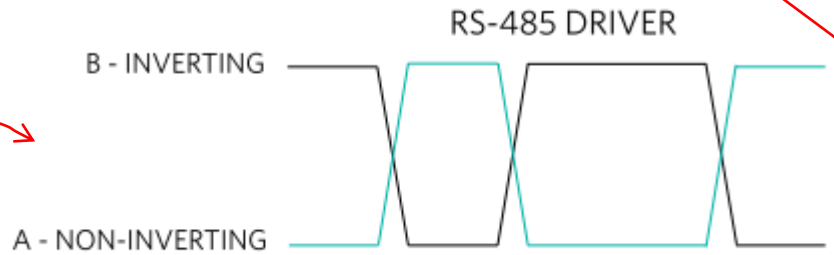

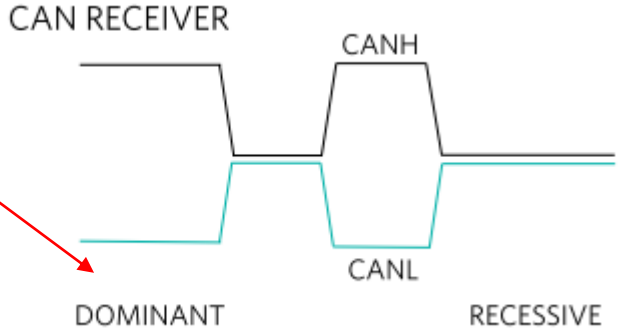

Laboratorijska vaja 13 - LV5

- 13.0: CANBUS osvežitev
- 13.1 Opis primera : Cybrotech CANBUS sistem
- 13.2: Krmiljenje Cybrotech IEX-2 modulov
- 13.3: CANBUS meritve
- 13.4: STM32 – osnovni IEX-2 modul

Tinia – prijazen dom
TBS – „Tinia Building Server”

Kratek opis

TBS – „Tinia Building Server”:

Nadzor,upravljanje in vizualizacija delovanja prijaznega doma.

- majhen, varčen, tih (5W)
- povezuje zgradbo in pametno mesto
- informiranje, povratna inf.
  - •pametni telefoni, tablice
  - •splet, soc.omrežja
- programiranje s pravili,vtičniki
- povezava s soc.omrežji
  - •Twitter,FaceBook

Pasivno ogrevanje/hlajenje…

Rolete, Žaluzije, Okna

- **Rolete**: med 0% - 100% (0% odprte, 100% zaprte)
- **Žaluzije** imajo stanja : Zaprto(100%), Senčeno(75%), Odprto(50%), Solarno pasivno (25%), Dvignjeno(0%).
- **Motorizirana** okna: Vklop/Izklop

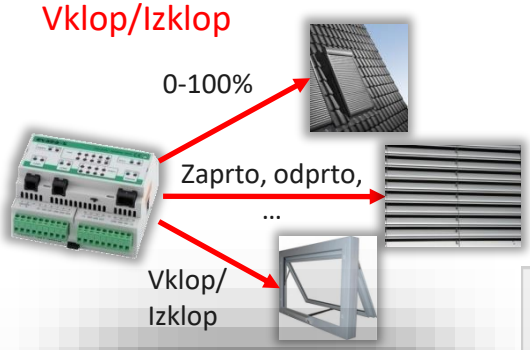

- Strešna okna z roletami :
  - severna, običajno:
    - **Odprta v toplem vremenu** za boljšo osvetlitev (poletje)
    - **Zaprta v hladnem vremenu** za ohranjanje toplote (zima)
  - južna, običajno:
    - **Odprta v hladnem, sončnem vremenu** za pasivno ogrevanje (zima, pomlad)
    - **Zaprta v vročem vremenu** proti pregrevanju (poletje)
- Žaluzije:
  - **Senčene ali zaprte ob izrazitem sončnem vremenu poleti**
  - **Odprte v "solarni" poziciji ob sončnih dnevih pozimi**
- Motorizirana okna (s komarniki) :
  - **Odprta v poletnih nočeh za pasivno ohlajanje**

Primer stanj rolet in temperatur v sončnem zimskem dnevu:

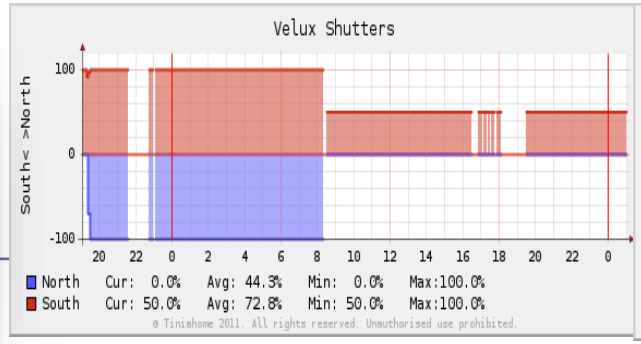

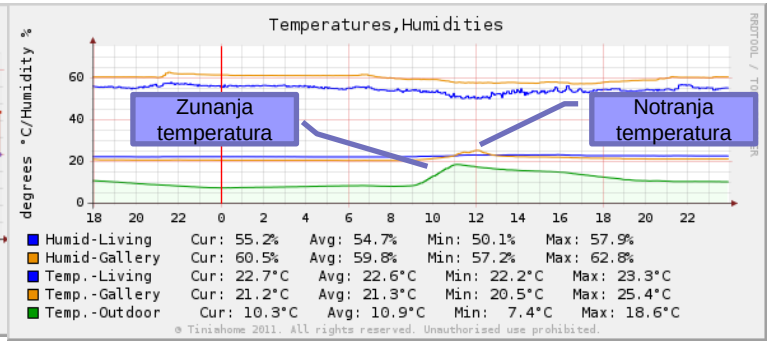

CANbus v praksi

INTEGRA BM SYSTEM

Industrial & Building Automation

High level network (Ethernet, A-Bus, Modbus)

CyBro controller

Low level network (Canbus)

Dodatki (tipala, daljinci, …)

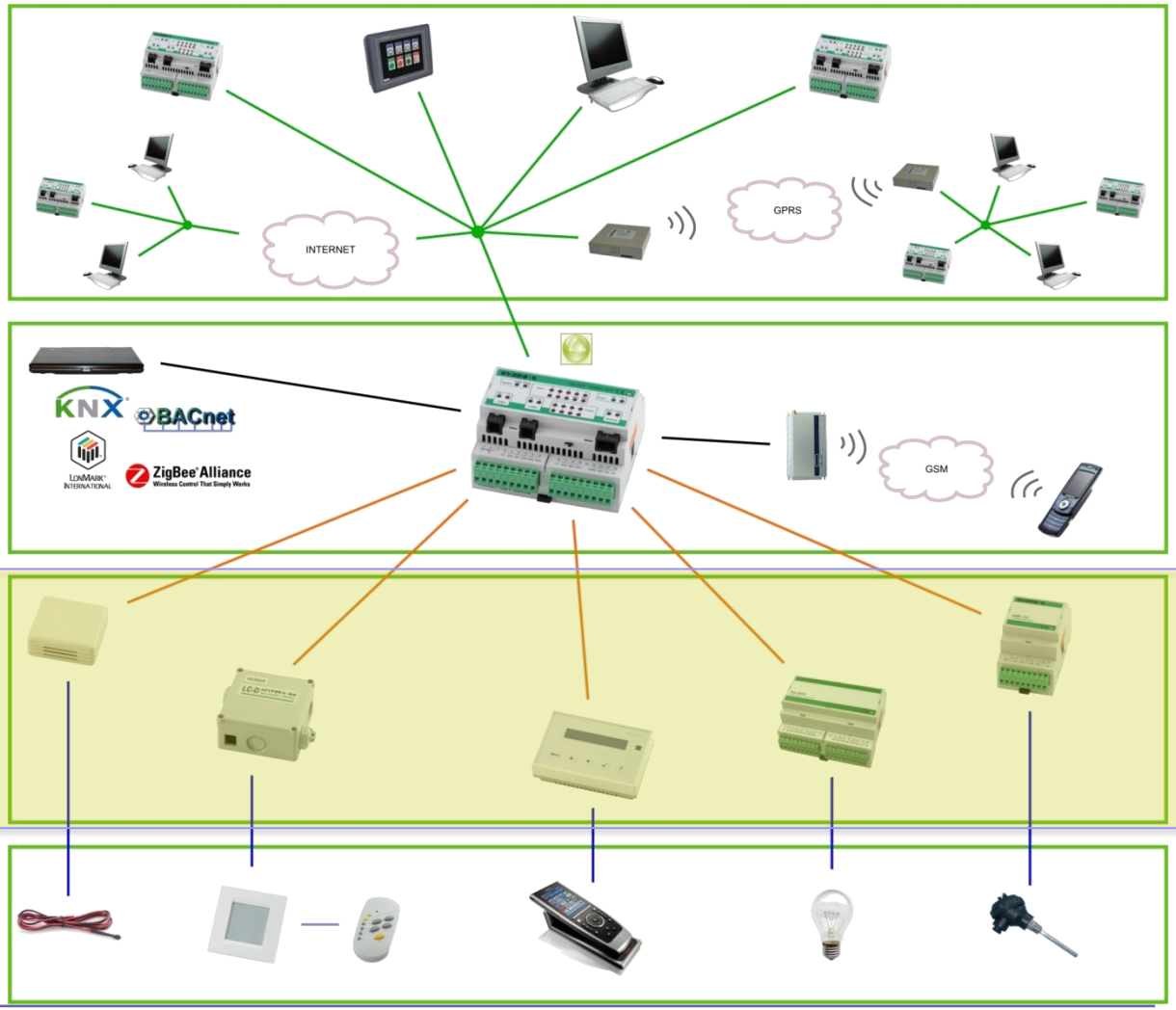

Bus length

Dolžina, hitrost in topologije

Regarding bus length, two points must be considered:

1. Voltage drop

Wire resistance cause voltage drop, which depends of cable length, wire diameter and power consumption. Cable must be selected to ensure each module have at least the minimum specified voltage.

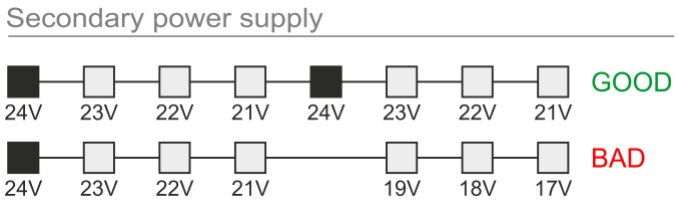

2. Signal delay

Communication speed is limited with propagation time and bus topology. With default 100kbps baudrate, 100m is safe without restrictions. For a longer distance, cable must be connected in a line (without trunks) and properly terminated.

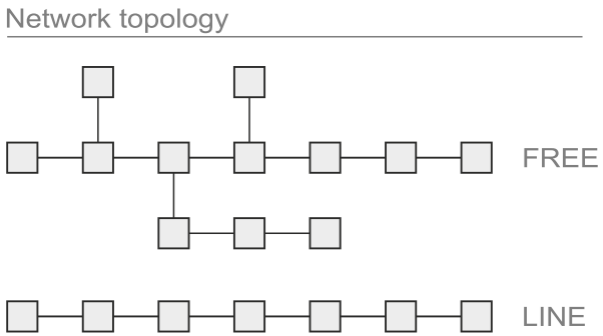

Speed\Topology	FREE	LINE
100kbps	100m	300m
50kbps	200m	500m
20kbps	500m	1000m

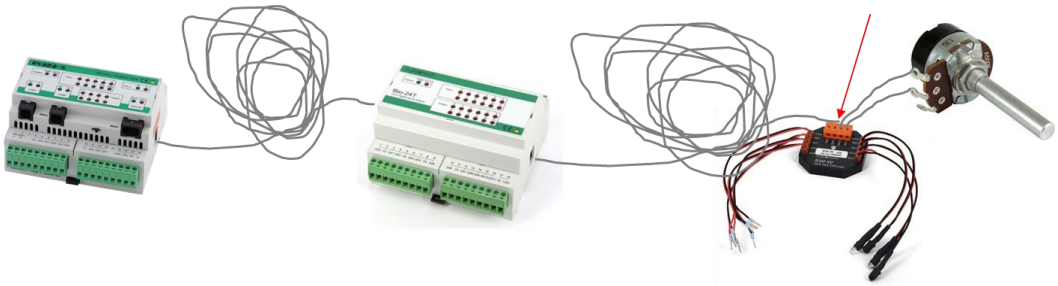

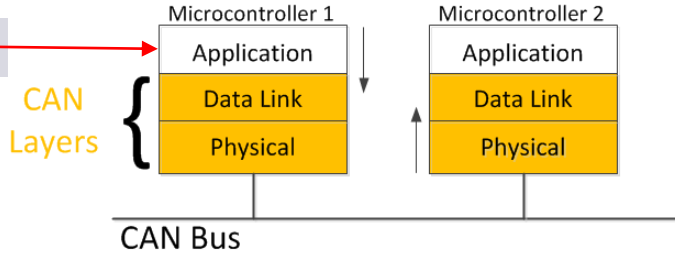

INTEGRA BM SYSTEM

IEX protocol (nadgradnja CANBUS)

IEX PROTOCOL v2.8 POVZETEK

General

IEX-2 is based on CAN 2.0B. Message format is defined as follows:

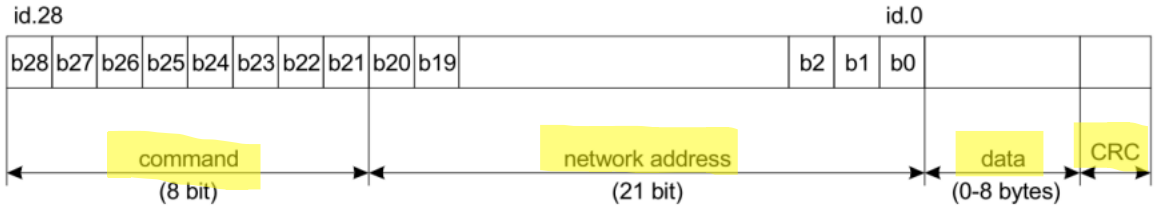

Command summary

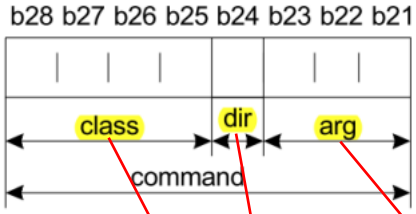

NAD – unikatni naslov IEX modula

command	class	dir	command	arg	data bytes	description	PCAN view
	0000						
	0001						
	0010						
IX_DATA	0011	1		xxx	data(1..4)	binary inputs	070-07Exxxxxh
QX_DATA		0		xxx	data(1..4)	binary outputs	060-06Exxxxxh
	0100						
	0101						
	0110						
IW_DATA	0111	1		xxx	data(2..8)	analog inputs	0F0-0FExxxxxh
QW_DATA		0		xxx	data(2..8)	analog outputs	0E0-0EExxxxxh
BAUDSYNC	1111	1		111	-	autobaud sync msg	1FFFFFFFh

INTEGRA BM SYSTEM

Cabling topology & Termination

1) Total IEX-2 bus length <100m

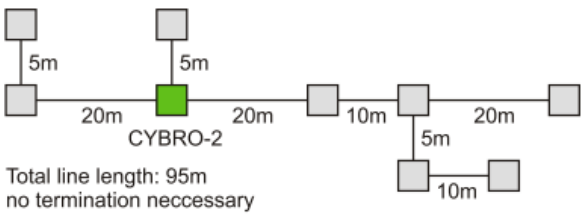

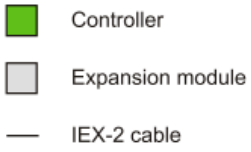

2) 100m< Total IEX-2 bus length <200m

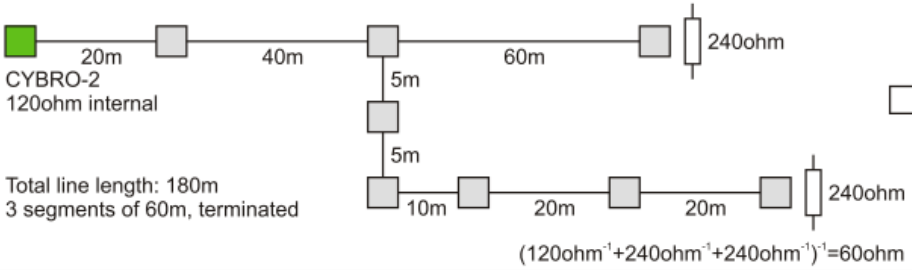

Termination

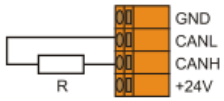

3) 200m < Total IEX-2 bus length <300m

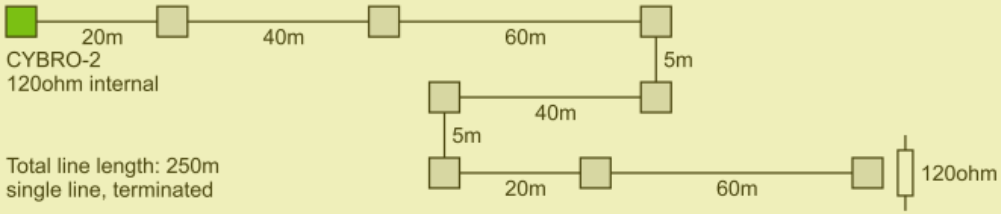

CENTRALNI KRMILNIK CYBRO-2

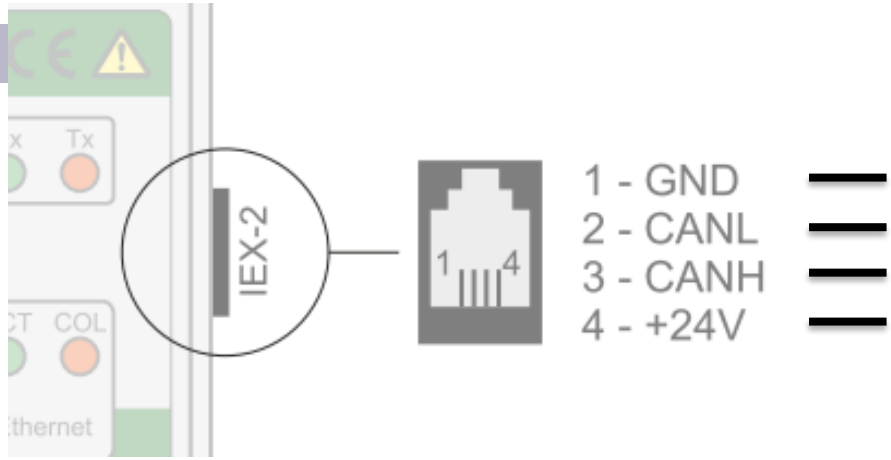

Controller

Ethernet port

2 x RS-232 port

CAN interface

Digital and analog I/O

Core

Modular

Block

Communication and status LED signalization

Retentive and permanent EEPROM memory

Removable connectors

230V AC or 24V DC

IEX MODULE FC

FC

fan coil module

SPECIFICATIONS:
1 x digital input
5 x relay output
2 x input temperature measurement
24V DC power supply
consumption: 110mA

MECHANIC:
field mountable

TYPE:
FC-FB

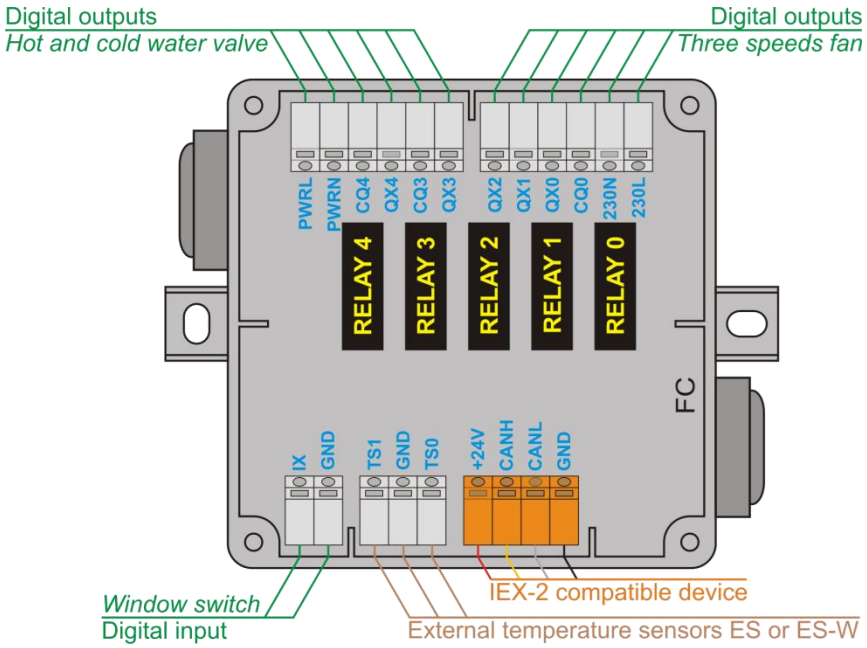

IEX MODULE FC

CONNECTING FAN COIL AND WINDOW SWITCH TO FC MODULE

FC

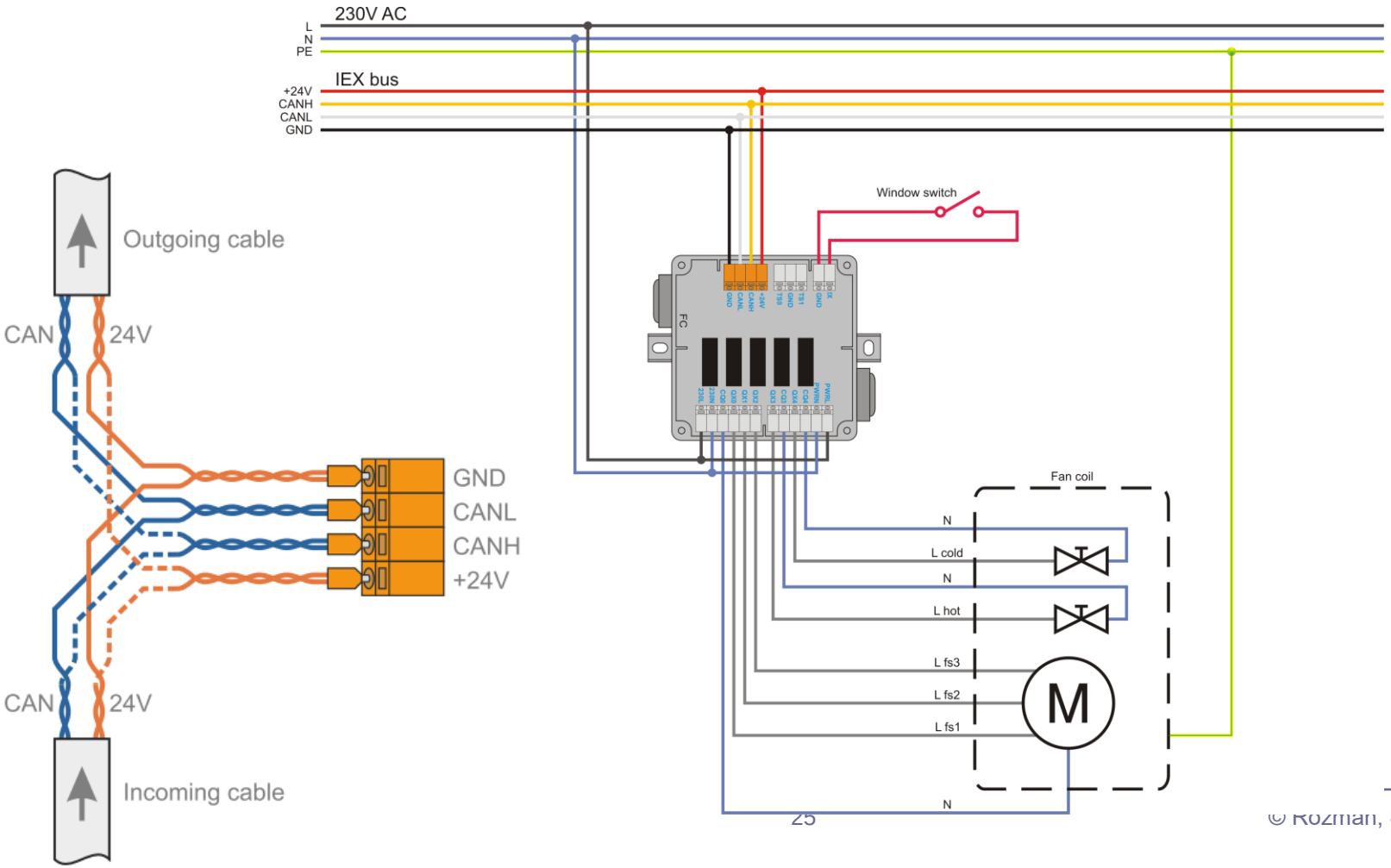

Primeri modulov

IEX MODULE Bio-24T

Wiring diagram

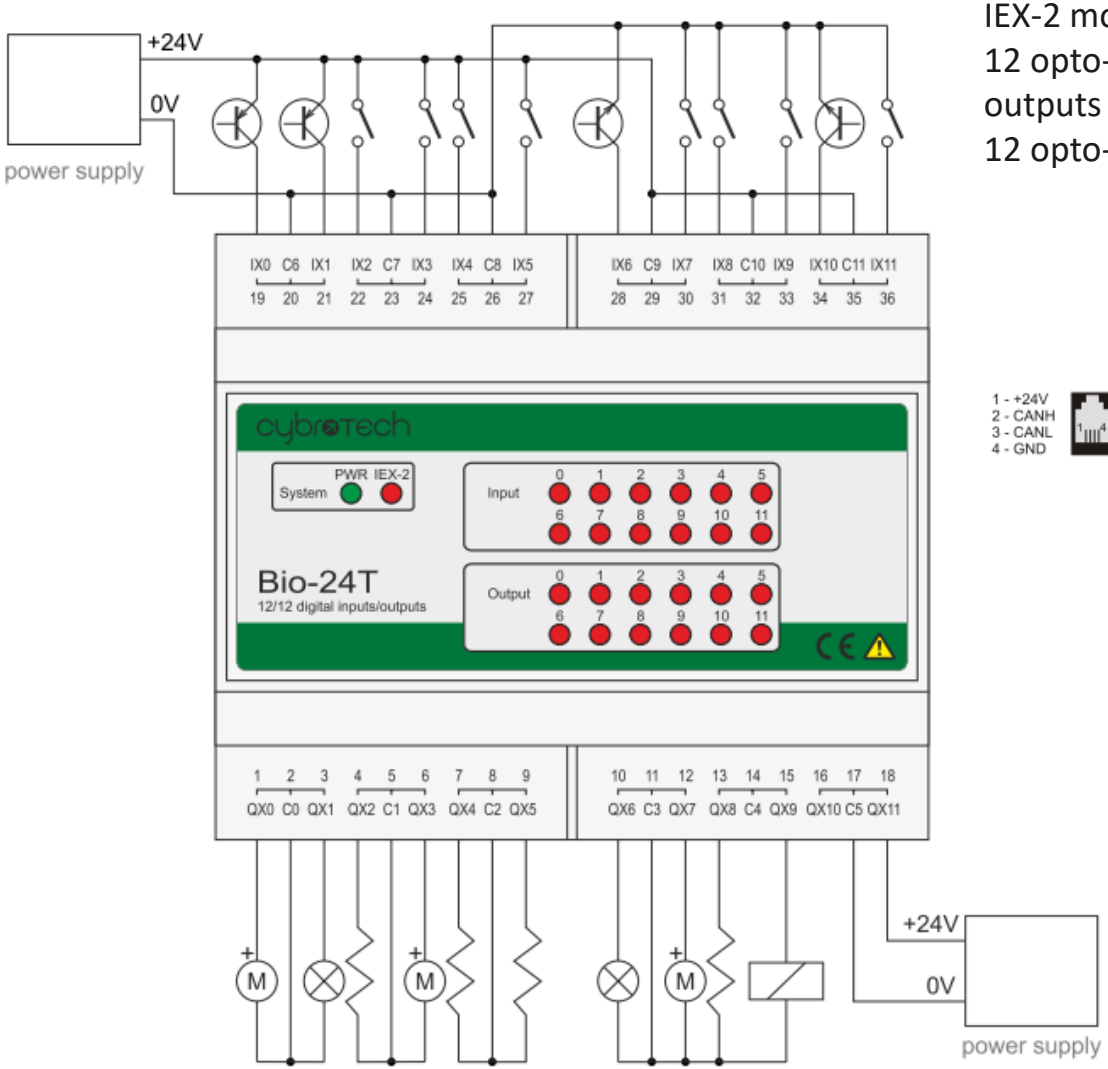

Bio-24T

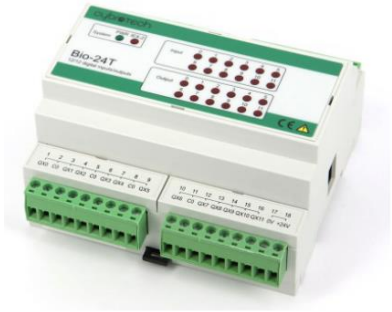

IEX-2 module
12 opto-isolated PNP transistor outputs 1A
12 opto-coupler inputs 24V

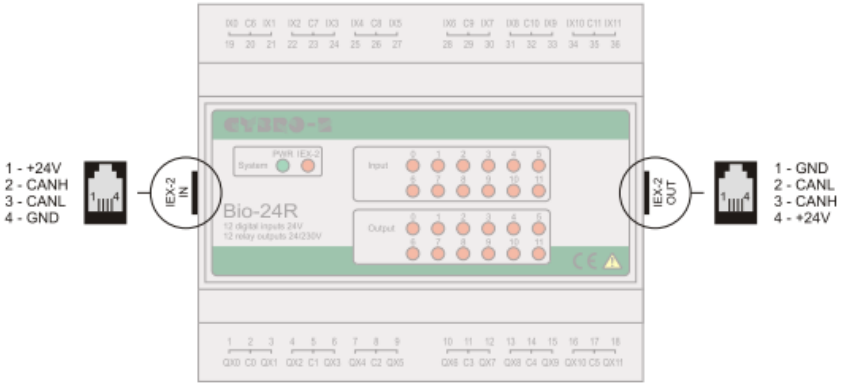

Figure 3: IEX-2 input and output ports.

Primeri modulov

IEX MODULE SW-L

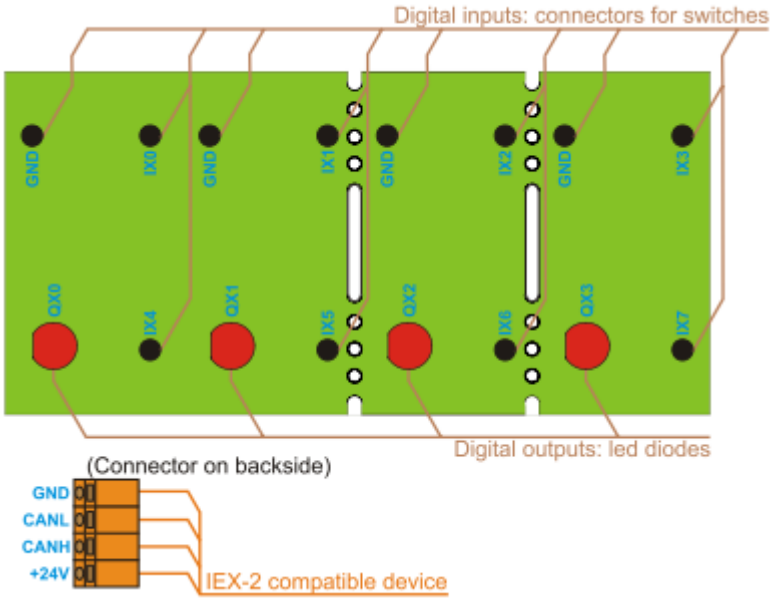

SW-L

IEX-2 module
4 switches
4 LED illuminations
Designed for Legrand, Bticino and TEM switches

Technical specifications

IX (8 digital inputs)	for connecting 4 switches
Current	2.5mA/12V
QX (4 digital outputs)	
Led illumination	3mm red led-diodes
Power supply	24V DC (18..26V DC), over IEX-2 bus
Power consumption	40mA
Mounting	2 x switch: flush box (diameter 60mm, depth 55mm), in wall 3 x switch: flush box (size 95x58mm, depth 49mm), in wall 4 x switch: flush box (size 120x58mm, depth 49mm), in wall
Dimensions	89x44x38mm

Primer IDE

CyPro

CyPro v2.7.6 - C:\Users\R\Documents\Sluzba\Vaje\VIN_Vh_Izh_naprave\VIN_2016_17\Vaje\13 Labvaja LV5_Canbus\VIN_vaje.cyp

File Edit View Project Program Tools Window Help

New Open Save Print Cut Copy Paste Environment Configuration Hardware Allocation Masks Sockets Send Monitor Start Stop

Project Tree

- Project: VIN_vaje.cyp
  - Program: New Program
    - Hardware
    - Masks
    - Sockets
    - ST: function main:void;
    - Description

Local Allocation

Name	Type	Attributes	Description

main

New Program - ST: function main:void;

```
if fp(clock_10s)  then
    bio00_qx00 := !bio00_qx00 ;
end_if ;

bio00_qx01 := !bio00_qx00 ;

if fp(bio00_ix00)  then
    bio00_qx02 := !bio00_qx02 ;
end_if ;

if fp(sw00_ix01)  then
    bio00_qx00 := !bio00_qx00 ;
end_if ;


if fp(clock_10ms)  then
    bio00_qx02 := !bio00_qx02 ;
end_if ;
```

Online Monitor

Monitor01

History

Variable name	Type	Value	Base
clock_10s	bit	0	Dec
bio00_ix00	bit	0	Dec
bio00_ix01	bit	0	Dec
bio00_qx00	bit	0	Dec
bio00_qx01	bit	0	Dec
bio00_qx02	bit	0	Dec
sw00_ix01	bit	0	Dec

Speed: 50ms (16s total) Close

Laboratorijska vaja 13 - LV5

- 13.0: CANBUS osvežitev
- 13.1 Opis primera : Cybrotech CANBUS sistem
- 13.2: Krmiljenje Cybrotech IEX-2 modulov
- 13.3: CANBUS meritve
- 13.4: STM32 – osnovni IEX-2 modul

13.2: Krmiljenje Cybrotech IEX-2 modulov

Povežemo enostaven sistem :

- glavni krmilnik Cybro 2
- različni IEX moduli (V/I)

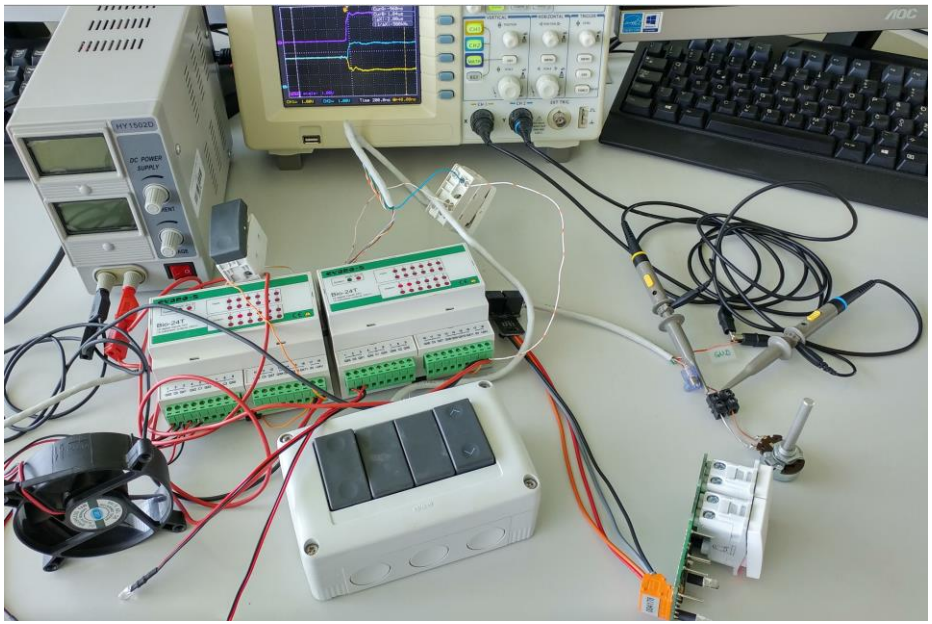

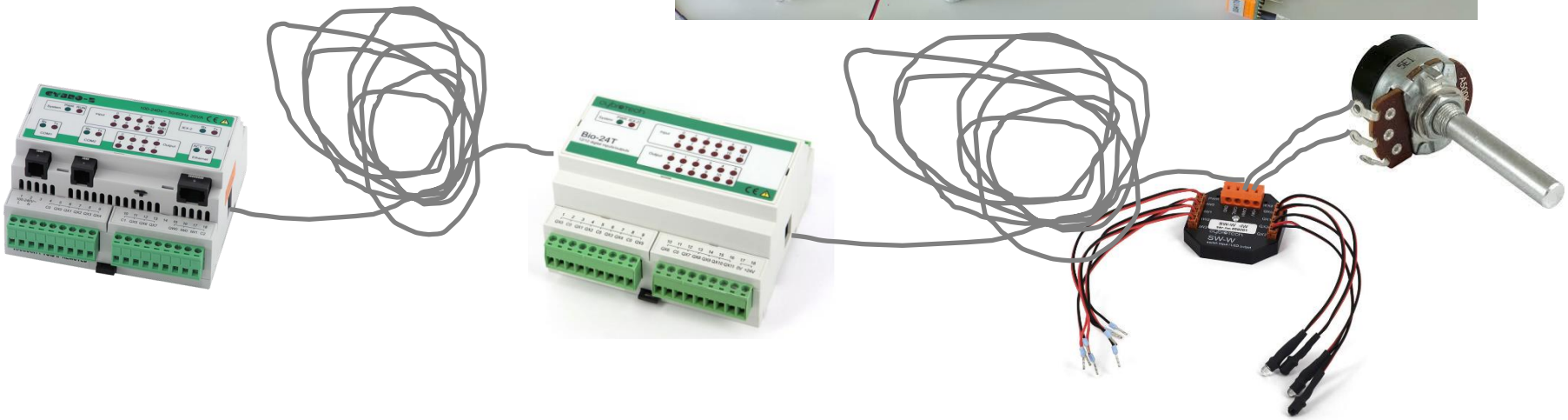

13.2: Krmiljenje Cybrotech IEX-2 modulov

Cypro IDE

Monitor

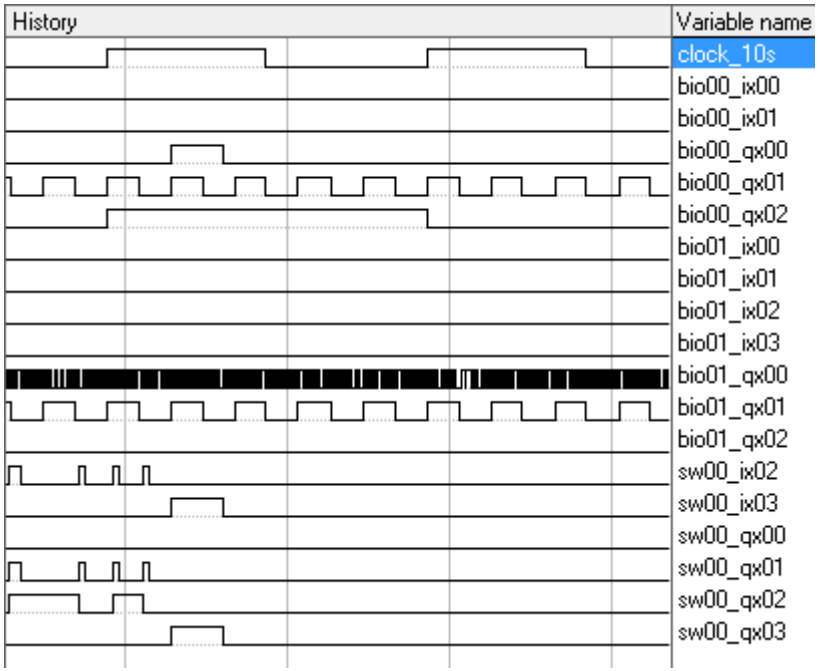

Program

```
// Periodic tasks
if fp(clock_10s)  then
    bio00_qx02 := !bio00_qx02 ;   // Red LED  every 10 secs
end_if ;


if fp(clock_1s)  then
    bio00_qx01 := !bio00_qx01 ;   // Red LED  every 1 sec
    bio01_qx01 := !bio01_qx01 ;   // Red LED  every 1 sec
end_if ;

if fp(clock_10ms)  then
    bio01_qx00 := !bio01_qx00 ;   // Red LED   every 10 msec
end_if ;

if fp(bio00_ix00)  then
    bio00_qx02 := !bio00_qx02 ;   // Red LED  on keypress
end_if ;


// SW Switch -> LED indicator & ventilator
sw00_qx03  := sw00_ix03;
bio00_qx00   := sw00_ix03;

sw00_qx01  := sw00_ix02;        // SW Key -> LED indicator

if fp(sw00_ix02)  then
    sw00_qx02 := !sw00_qx02 ;   // SW Key -> change LED indicator
end_if ;
```

Laboratorijska vaja 13 - LV5

- 13.0: CANBUS osvežitev
- 13.1 Opis primera : Cybrotech CANBUS sistem
- 13.2: Krmiljenje Cybrotech IEX-2 modulov
- 13.3: CANBUS meritve
- 13.4: STM32 – osnovni IEX-2 modul

13.3: CANBUS meritve

Izmerite stanje na vodilu pri :

- Različnih zaključitvah na koncu vodila
  - Odprte sponke, 500ohm, zaključitev (107ohm)

- Dveh različnih bitnih hitrostih (500kb/s, 100kb/s)

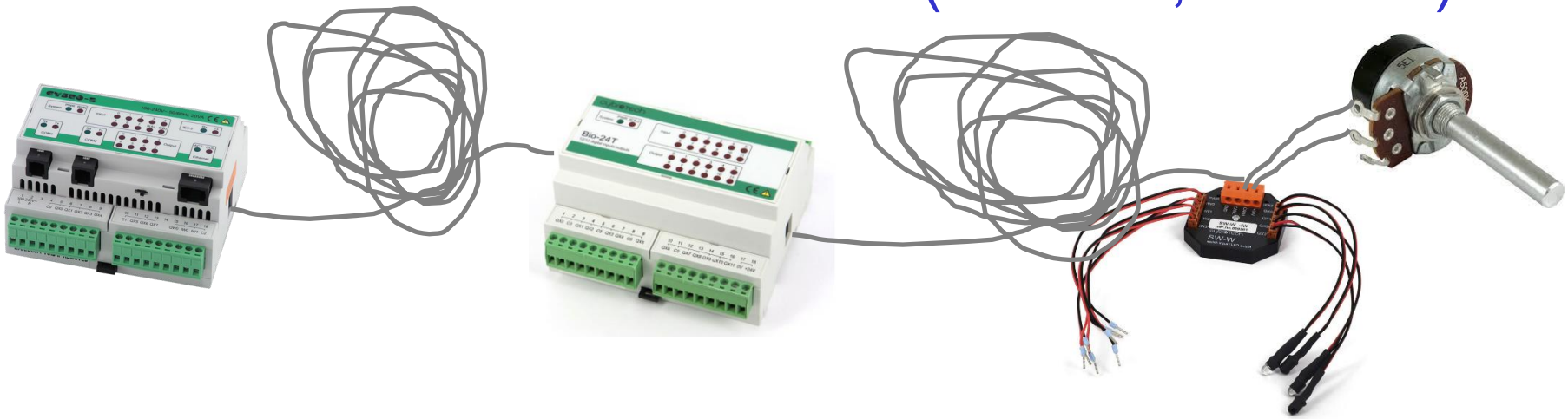

13.3: CANBUS meritve

500kb/s:

Odprte sponke

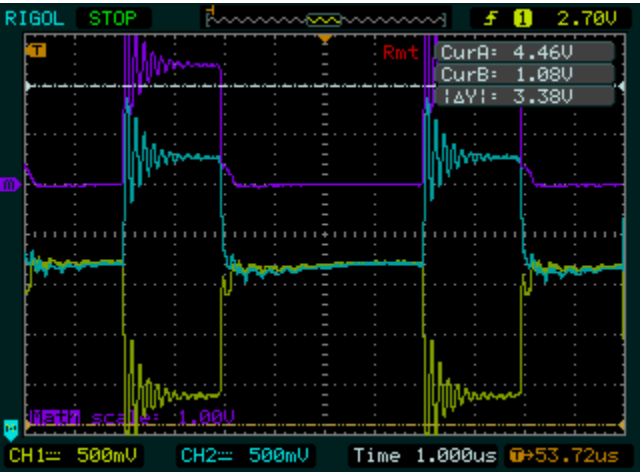

500ohm

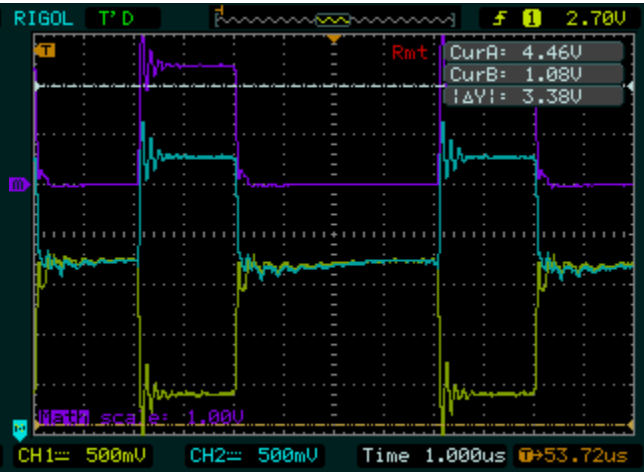

107ohm

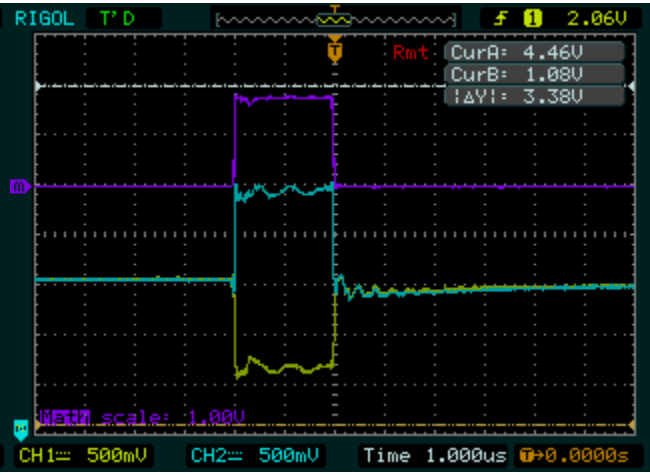

3 zavitki UTP kabla s spojniki – cca 40m…

13.3: CANBUS meritve

100kb/s:

Odprte sponke

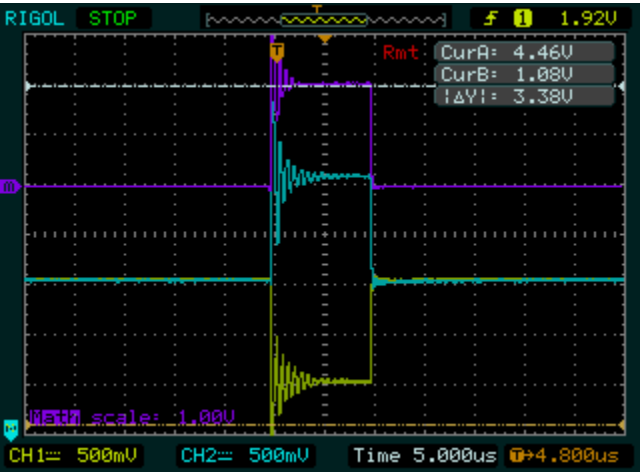

500ohm

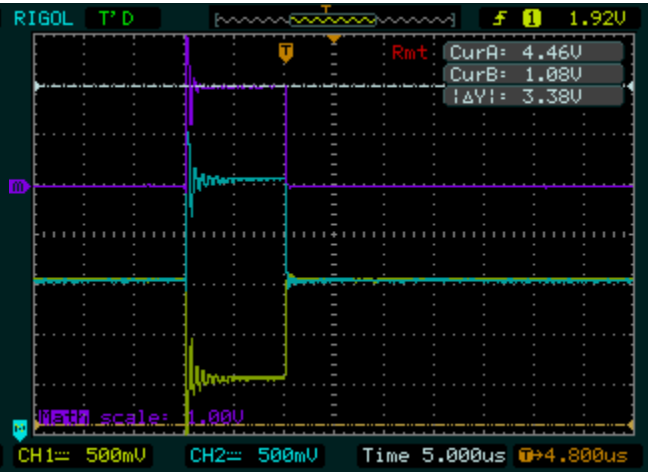

107ohm

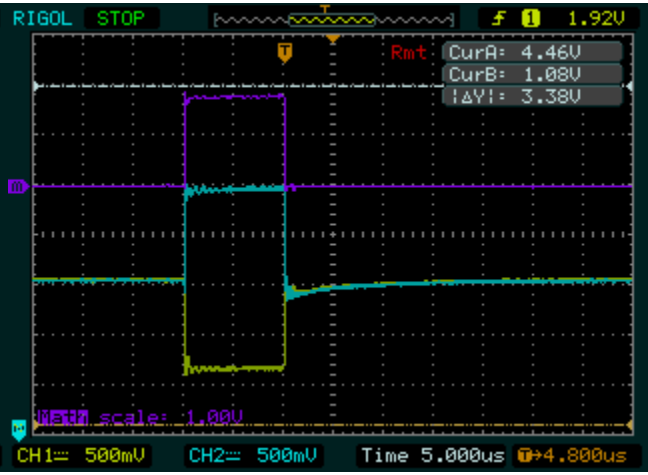

3 zavitki UTP kabla s spojniki – cca 40m…

13.3: CANBUS meritve

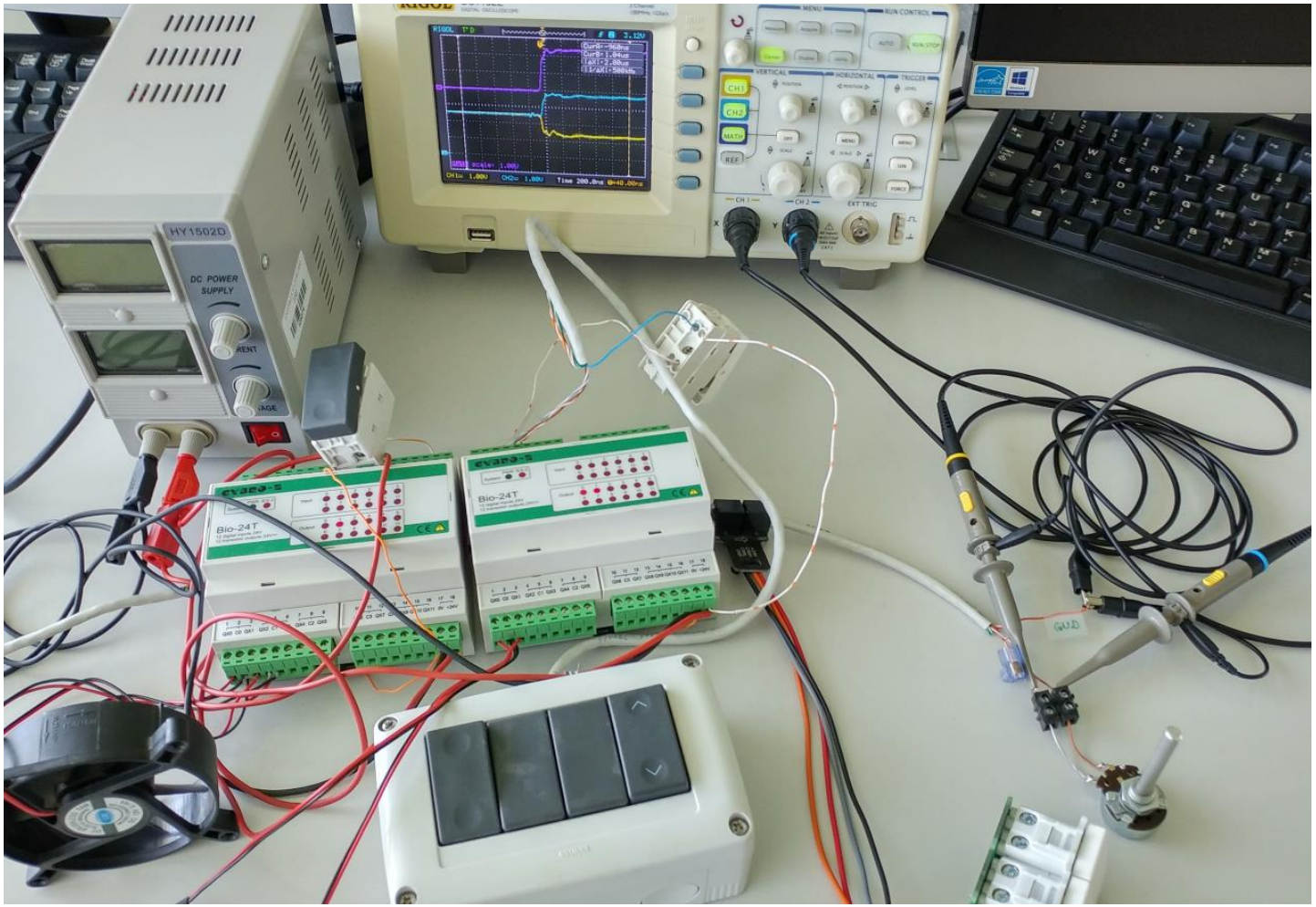

13.3: CANBUS meritve

Nezaključena linija

Zaključena linija

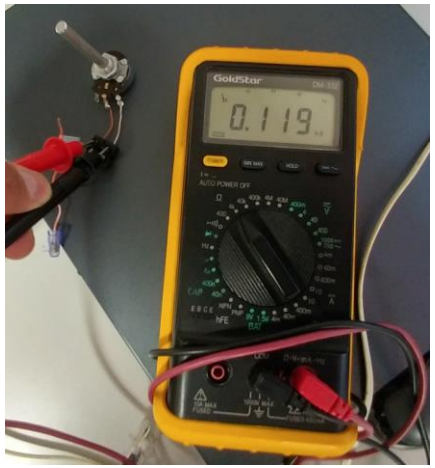

Laboratorijska vaja 13 - LV5

- 13.0: CANBUS osvežitev
- 13.1 Opis primera : Cybrotech CANBUS sistem
- 13.2: Krmiljenje Cybrotech IEX-2 modulov
- 13.3: CANBUS meritve
- 13.4: STM32 – osnovni IEX-2 modul

13.4: STM32 – osnovni IEX-2 modul

Strojna oprema:

- STM32F4 Discovery in
- shield (Mikroelektronika)
  - vsebuje CANBUS PHY vezje
- ali zunanje CAN PHY vezje

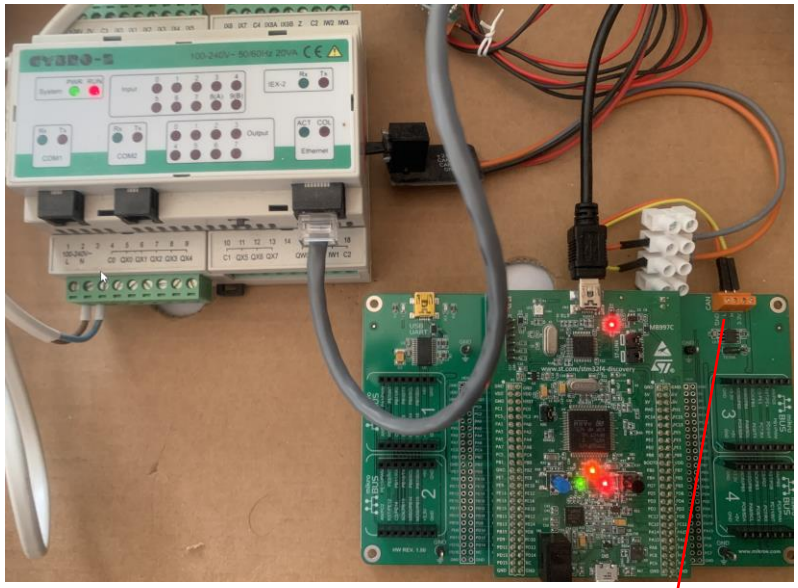

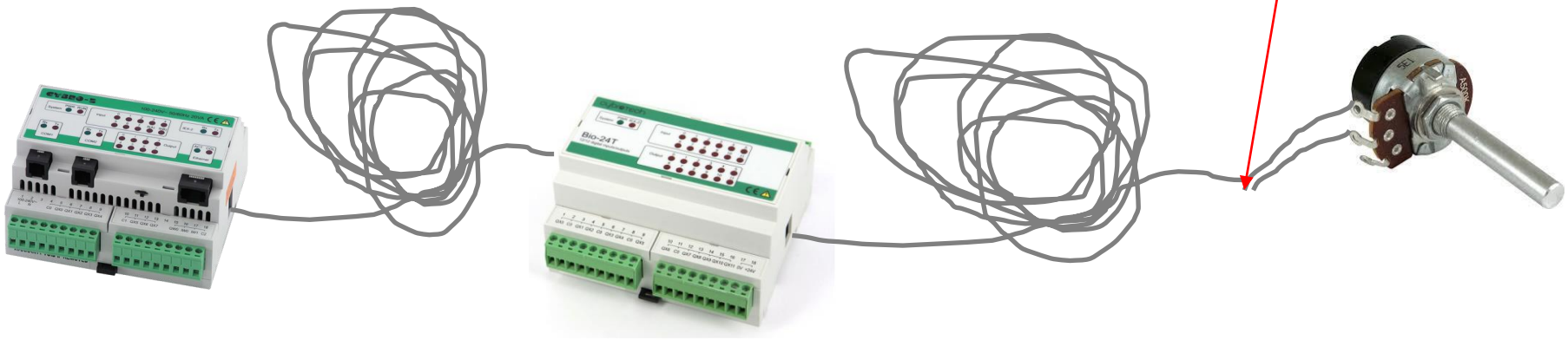

13.4: STM32 – osnovni IEX-2 modul

Vključitev in krmiljenje modula – Cypro IDE

Hardware Setup

Autodetect | Clear All | Clear Modules | Clear Missing | Clear | Move Up | Mo

Slot	Name	Description	NAD	Prefix	Status
CPU Unit	CyBro-2	10 binary inputs, 8 binary outputs, 4 a...	7332		
Slot 1	STM32F4	STM32F4 Multi Sensor 1 user key inp...	750	stm00	
Slot 2					
Slot 3					
Slot 4					
Slot 5					
Slot 6					

STM32F4.cym

```
object THWModule
  Name = 'STM32F4'
  CardID = 250
  Description = 'STM32F4 Multi Sensor 1 user key input/4 LED outputs
  Capabilities = []
  DisplayWidth = 0
  DisplayHeight = 0
  MaskMemorySize = 0
  VarPrefix = 'stm?_'
  IOAllocData =
```

main

New Program - ST: function main:void;

```
if fp(clock_10s)  then
   stm00_qx00:=!stm00_qx00;  //Green LED
end_if;


if fp(stm00_ix00)  then
   stm00_qx01:=!stm00_qx01;  //Orange LED
end_if;

if fn(stm00_ix00)  then
   stm00_qx02:=!stm00_qx02;  //Red LED
end_if;


stm00_qx03:=stm00_ix00;     //Blue LED
```

Online Monitor

Monitor01

History | Variable name

stm00_qx00
stm00_qx01
stm00_qx02
stm00_ix00
stm00_qx03
stm00_timeout_error
stm00_program_error
stm00_general_error
stm00_bus_error

13.4: STM32 – osnovni IEX-2 modul

Programska oprema – CubeIDE Projekt - izseki

main.c:

```
//IX_system_data command id for sending onbus status
volatile unsigned long status_id = NAD_default +IEX2_ID_SEND_ONBUS_STATUS;
volatile unsigned char status_data[4] = {0,0,0,IEX2_CYM_ID_V1};
// IX_data command id for sending input bits IX
volatile unsigned long IX_id = NAD_default + IEX2_ID_SEND_IX0_STATUS ;
volatile unsigned char IX_data[2] = {0, 0};

while (1)
  {
      //  Check for received CANBUS messages
        if(HAL_CAN_GetRxFifoFillLevel(&hcan1, CAN_RX_FIFO0) != 0)
             {
                 HAL_CAN_GetRxMessage(&hcan1, CAN_RX_FIFO0, &RxHeader, CAN_Rx_Msg);
                 CanMsgCnt++;

                 if (RxHeader.IDE) {
                     CANBus_Parse_RX_Message (RxHeader.ExtId,RxHeader.DLC, CAN_Rx_Msg);
                 }
                 …
        }

        // Send Status/Info message every 0.5 second
        nowTime = HAL_GetTick();
        if ((nowTime - lastTime) >= 500) {
                CANBus_Send(status_id, status_data, 4, 0, 0);
                lastTime = nowTime;
        }

        // Check USER Key state
        temp = HAL_GPIO_ReadPin(GPIOA, GPIO_PIN_0);
        if (temp != KeyState) {   // Key state changed !!! - send as IX message
                ???
        }
        …
  }
```

main.h:

```
#define NAD_default (long)750// Defines Node V1 NAD for IEX
// These are IDs that are reported to IEX master for module
identification (read appropriate .cym files)
#define IEX2_CYM_ID_V1     250   // 255 is max, select
unique ID, also specified in .cym file

#define IEX2_DIRECTION_NODE2RC  0x1000000
#define IEX2_DIRECTION_RC2NODE  0x0000000

#define IEX2_COMMAND_BIT_DATA   0x6000000
#define IEX2_COMMAND_WORD_DATA  0xe000000

#define IEX2_ARGUMENT_IO_DATA0   0x000000
#define IEX2_ARGUMENT_IO_DATA4   0x200000
#define IEX2_ARGUMENT_SYS_DATA16 0x800000

//const unsigned long status_id=NAD + 0x7800000 ;
#define IEX2_ID_SEND_ONBUS_STATUS  (IEX2_COMMAND_BIT_DATA |
IEX2_DIRECTION_NODE2RC | IEX2_ARGUMENT_SYS_DATA16)

// IX_id=NAD_v1+0x7000000 ; IX_data command id for sending
input bits IX
#define IEX2_ID_SEND_IX0_STATUS    (IEX2_COMMAND_BIT_DATA |
IEX2_DIRECTION_NODE2RC | IEX2_ARGUMENT_IO_DATA0)
```

iex.c:

```
uint_32 CANBus_Parse_RX_Message (uint_32 ID,uint_32 msg_size,
unsigned char dptr [])
{ … }

unsigned char CANBus_Send(volatile unsigned long Id, volatile
unsigned char MessageData[],volatile unsigned char
MessageLen,volatile unsigned char MessageType, volatile
unsigned char Debug) { … }
```