Vhodno izhodne naprave

Laboratorijska vaja 3 - VP 2
TinkerCad-Arduino osnove

VIN projekt - VP2: TinkerCad, Breadboard, Arduino

- Spoznavanje TinkerCad-a II.
- Breadboard
- TinkerCad + Arduino
- Domača naloga

VIN projekt - VP2: TinkerCad, Breadboard, Arduino

- Spoznavanje TinkerCad-a II.
- Breadboard
- TinkerCad + Arduino
- Domača naloga

TinkerCad – Serijski izpis in vizualizacija

```
void setup()
{
  pinMode(2, INPUT);
  pinMode(A0, INPUT);
  Serial.begin(9600);

}

void loop()
{
  // read the input pin
  buttonState = digitalRead(2);
  // read the input on analog pin 0:
  sensorValue = analogRead(A0);
  // print values to the serial monitor
  Serial.print(buttonState);
  Serial.print(", ");
  Serial.println(sensorValue);
  delay(10); // Delay a little bit t
}
```

Izpis

Vizualizacija

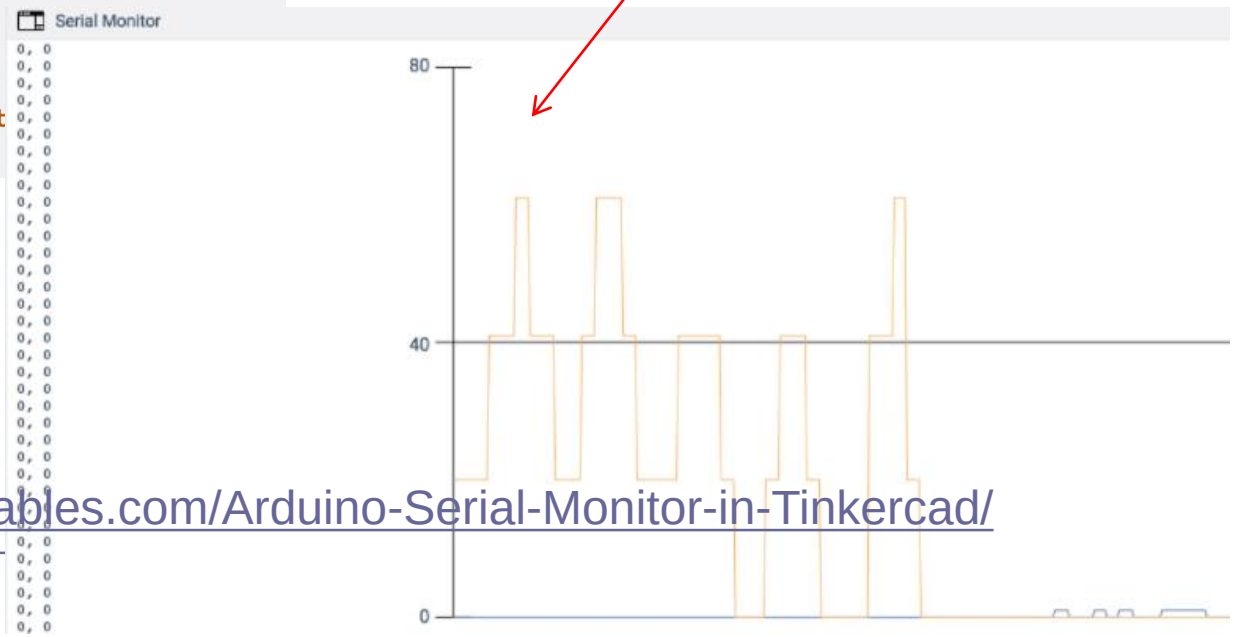

https://www.instructables.com/Arduino-Serial-Monitor-in-Tinkercad/

TinkerCad – razhroščevanje (debugging)

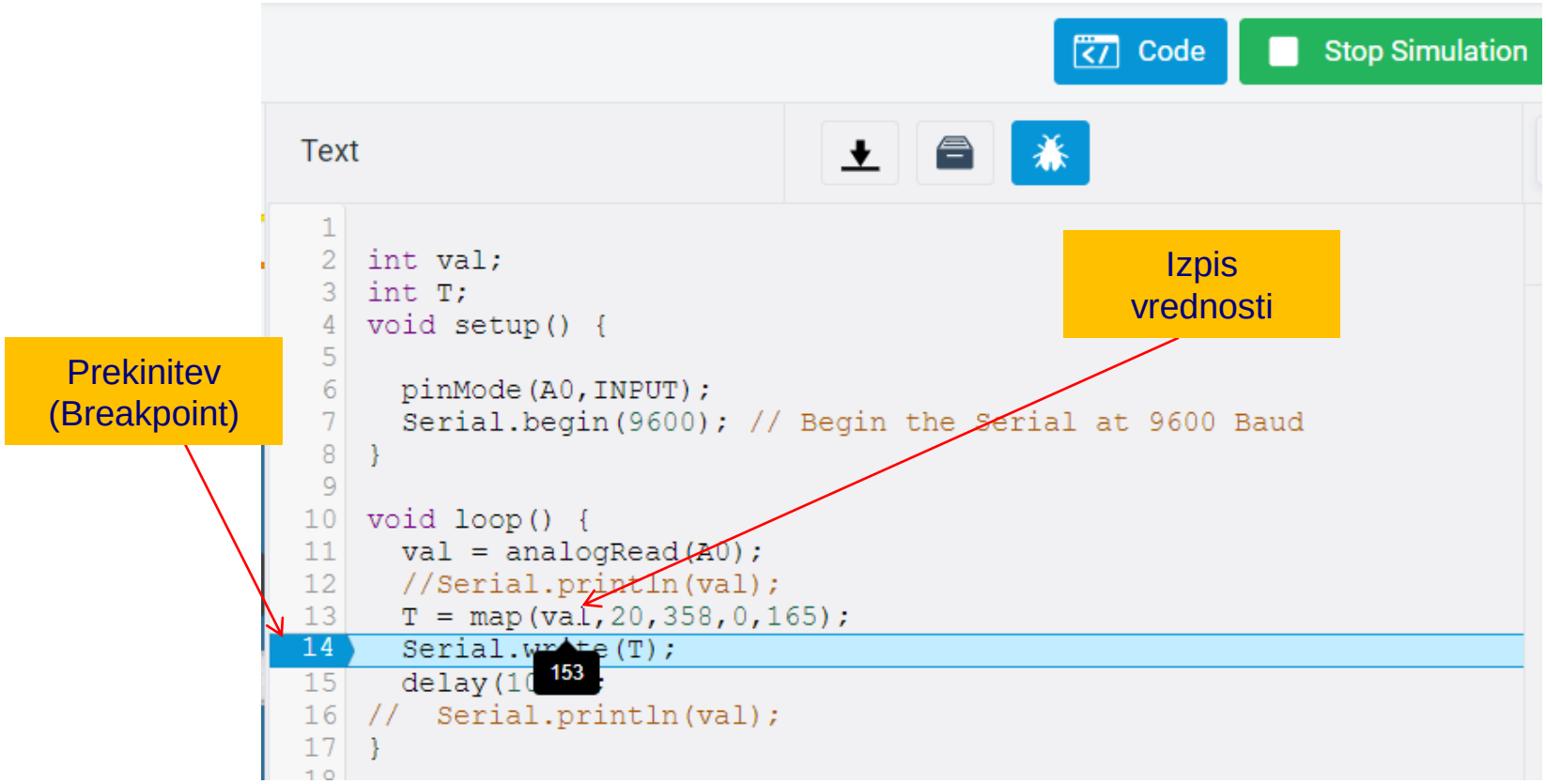

https://www.instructables.com/Arduino-Serial-Monitor-in-Tinkercad/

VIN projekt - VP2: TinkerCad, Breadboard, Arduino

- Spoznavanje TinkerCad-a II.
- Breadboard
- TinkerCad + Arduino
- Domača naloga

VIN projekt : TinkerCad Breadboard vezave

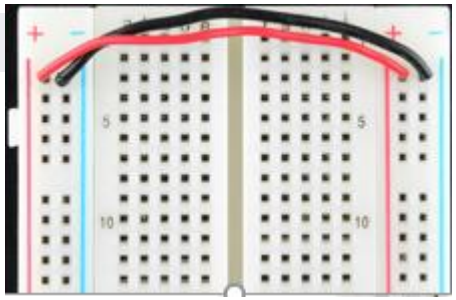

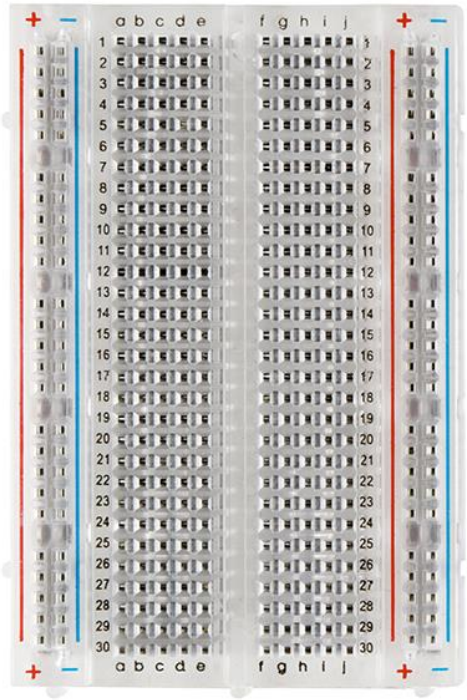

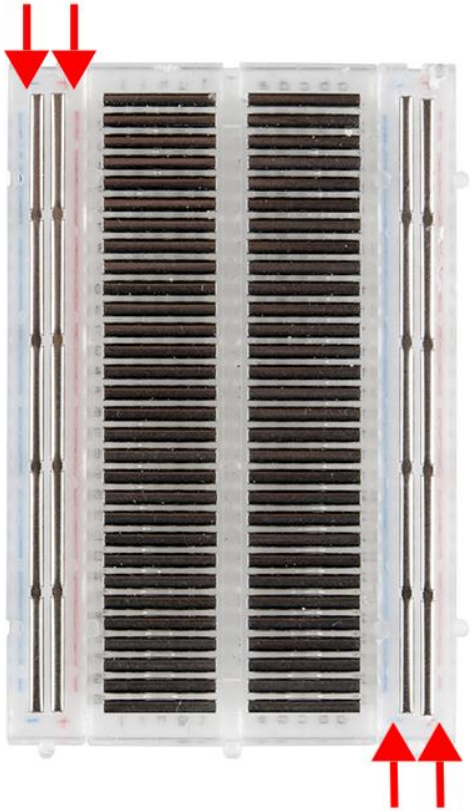

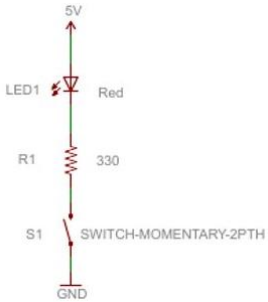

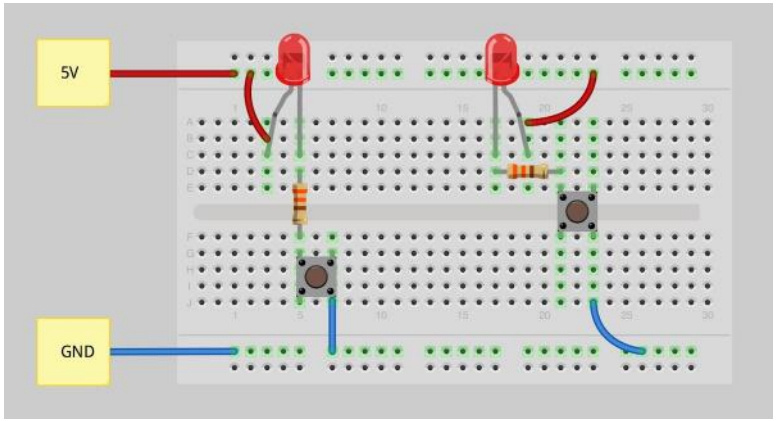

Viri

- https://learn.sparkfun.com/tutorials/how-to-use-a-breadboard/
- https://www.sciencebuddies.org/science-fair-projects/references/how-to-use-a-breadboard

VIN projekt : TinkerCad
Breadboard vezave – primeri vezav

Breadboard vezave

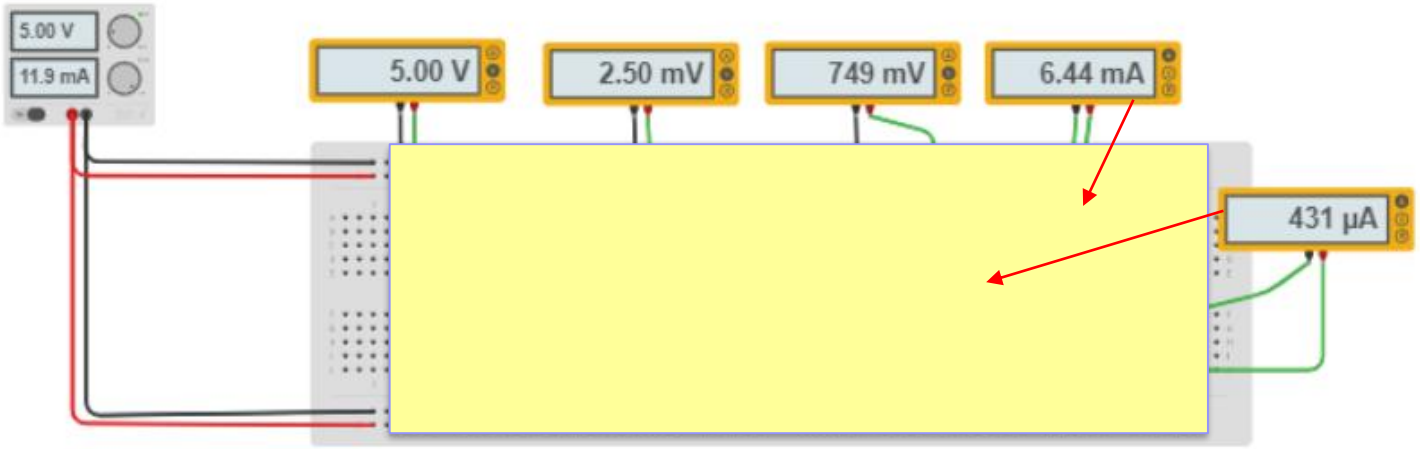

VIN projekt : TinkerCad
Breadboard vezave – Primer rešitve

Breadboard vezave

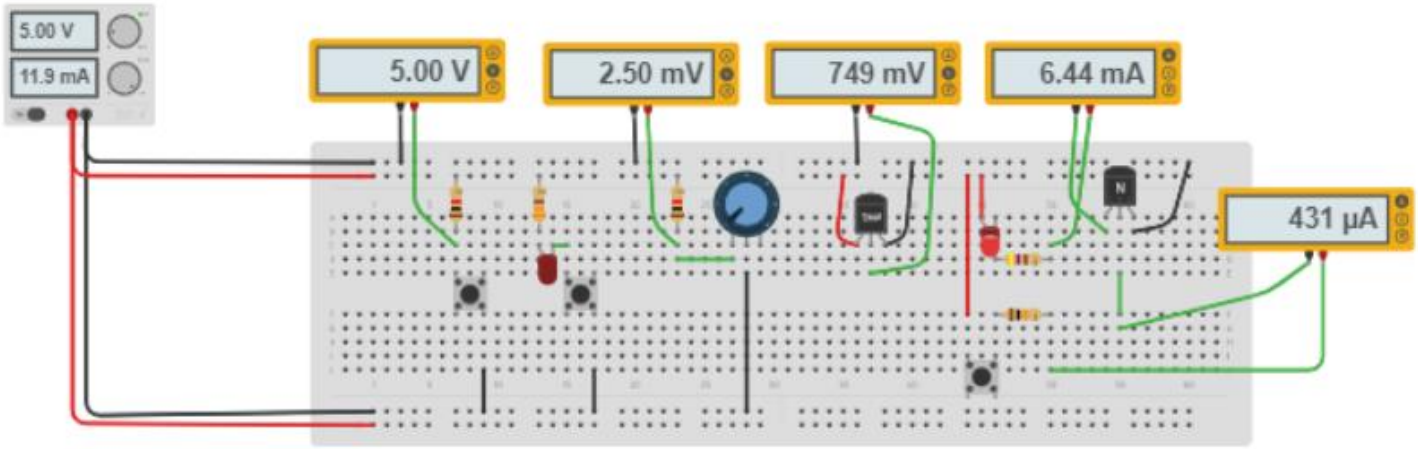

VIN projekt - VP2: TinkerCad, Breadboard, Arduino

- Spoznavanje TinkerCad-a II.
- Breadboard
- TinkerCad + Arduino
- Domača naloga

ARDUINO HW INTRO

https://academy.programmingelectronics.com/arduino-hardware-basics/

Arduino – dokumentacija

https://www.arduino.cc/reference/en

- LANGUAGE
  - FUNCTIONS
  - VARIABLES
  - STRUCTURE
- LIBRARIES
- IOT CLOUD API
- GLOSSARY

Find anything that can be improved? Suggest corrections and new documentation via GitHub.

Doubts on how to use Github? Learn everything you need to know in this tutorial.

Language Reference

Arduino programming language can be divided in three main parts: functions, values (variables and constants), and structure.

FUNCTIONS

For controlling the Arduino board and performing computations.

Digital I/O

digitalRead()
digitalWrite()
pinMode()

Analog I/O

analogRead()
analogReference()
analogWrite()

Math

abs()
constrain()
map()
max()
min()
pow()
sq()
sqrt()

Random Numbers

random()
randomSeed()

Bits and Bytes

bit()
bitClear()
bitRead()
bitSet()

Preprosto vezje z LED diodo in program

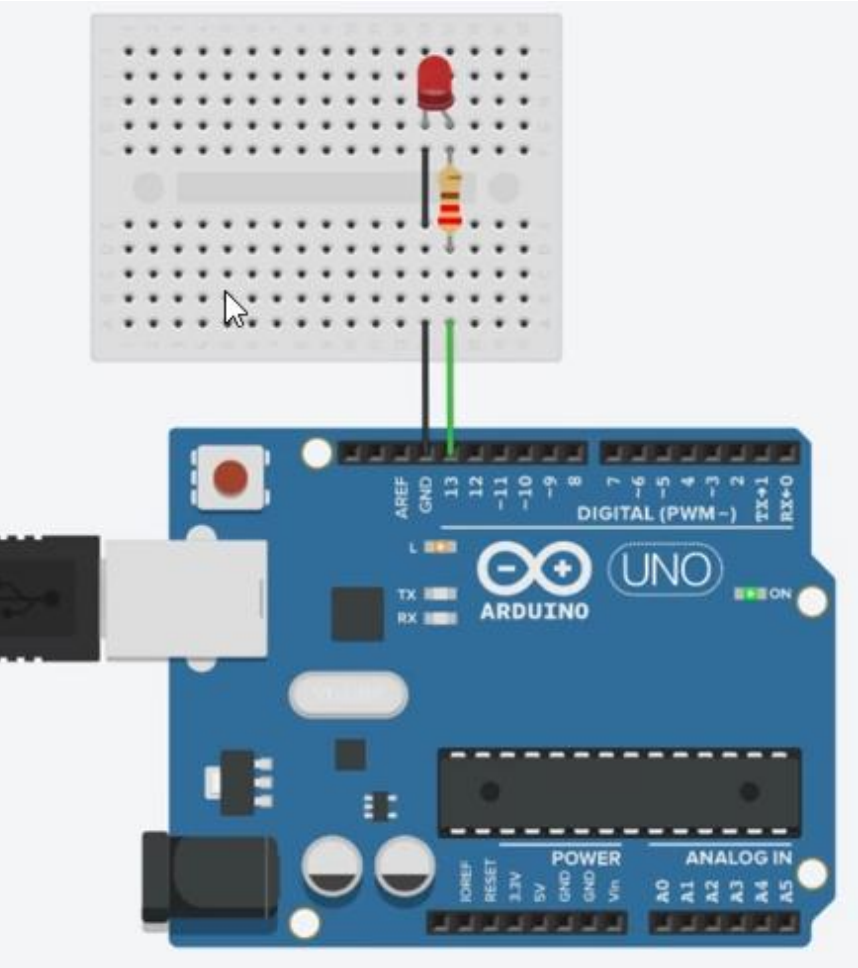

hello_world

```
/*
  This program blinks pin 13 of the Arduino (the
  built-in LED)
*/

void setup()
{
  pinMode(13, OUTPUT);
}

void loop()
{
  // turn the LED on (HIGH is the voltage level)
  digitalWrite(13, HIGH);
  delay(1000); // Wait for 1000 millisecond(s)
  // turn the LED off by making the voltage LOW
  digitalWrite(13, LOW);
  delay(1000); // Wait for 1000 millisecond(s)
}
```


Preprosto vezje z LED diodo

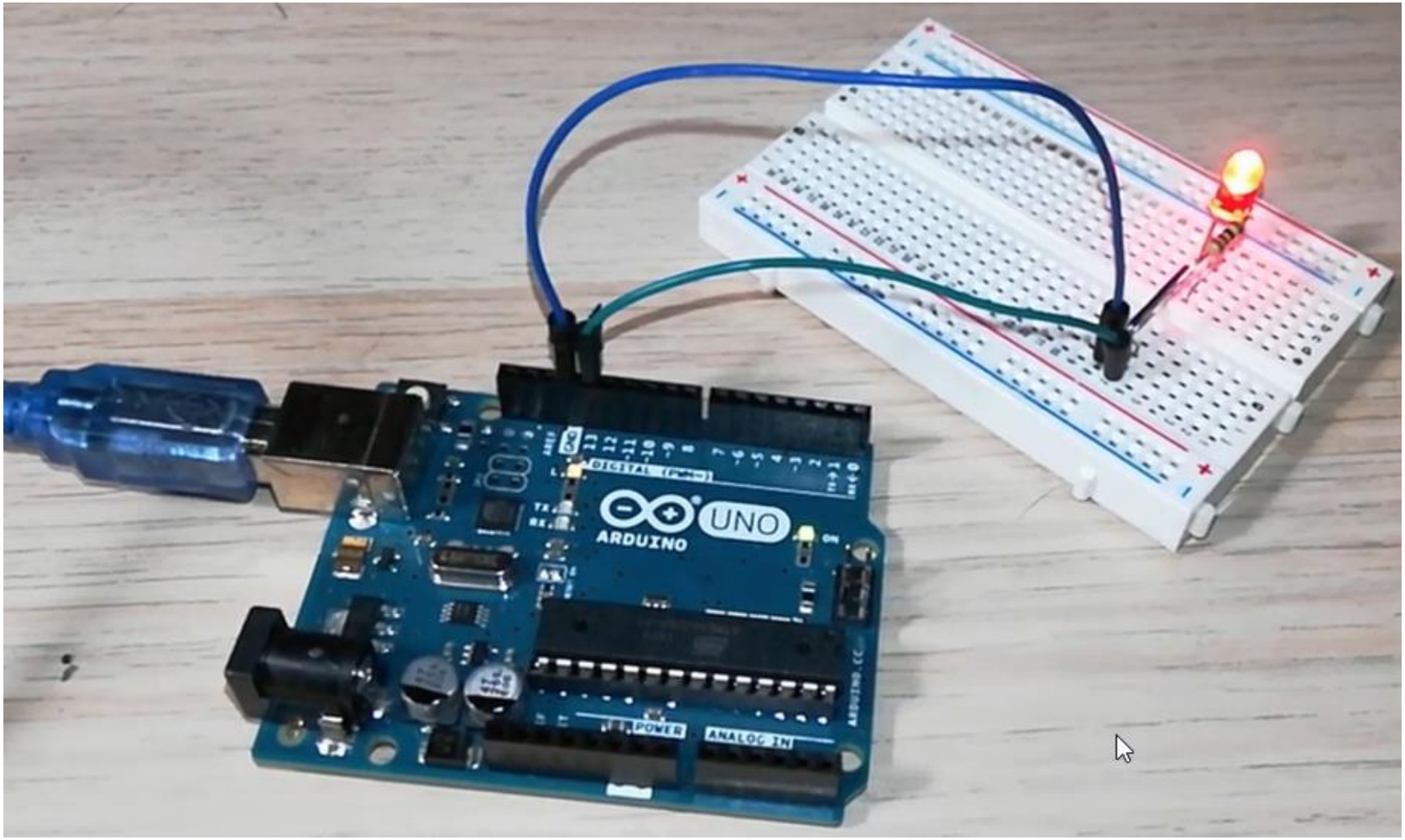

Vezje z uporovnim „tipalom“ (potenciometrom) - ADC

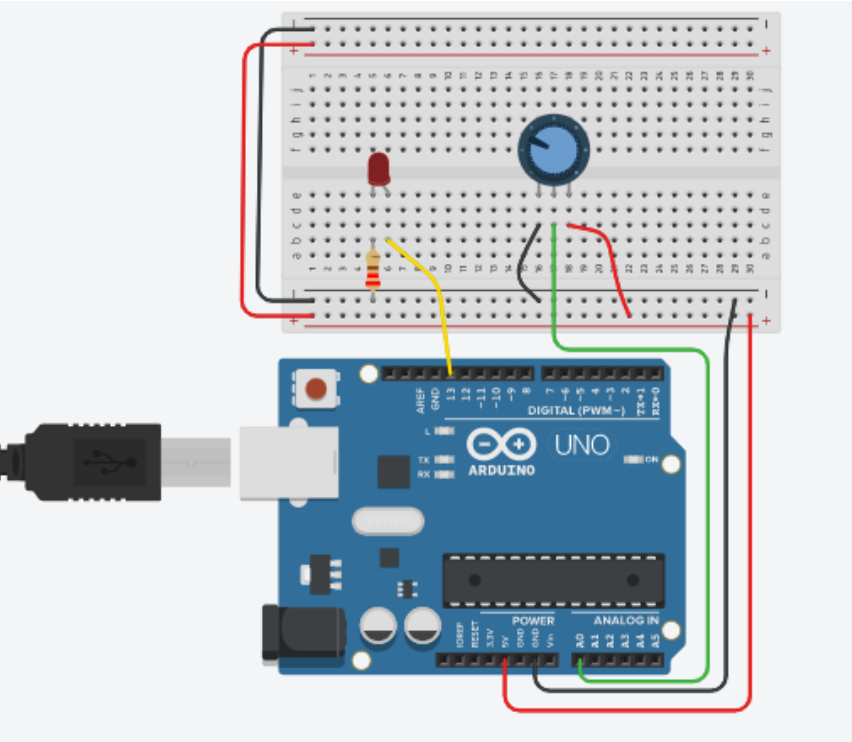

Text | 1 (Arduino Uno R3)

```
int sensorValue = 0;

void setup()
{
  pinMode(A0, INPUT);
  pinMode(13, OUTPUT);
}

void loop()
{
  // read the value from the sensor
  sensorValue = analogRead(A0);
  // turn the LED on
  digitalWrite(13, HIGH);
  // pause the program for <sensorValue> millseconds
  delay(sensorValue); // Wait for sensorValue millisecond(s)
  // turn the LED off
  digitalWrite(13, LOW);
  // pause the program for <sensorValue> millseconds
  delay(sensorValue); // Wait for sensorValue millisecond(s)
}
```

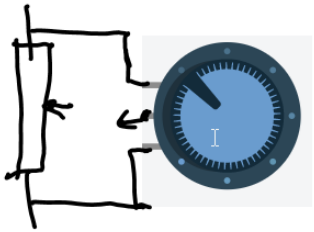

Preprosto vezje z UZ tipalom – Časovnik (Timer)

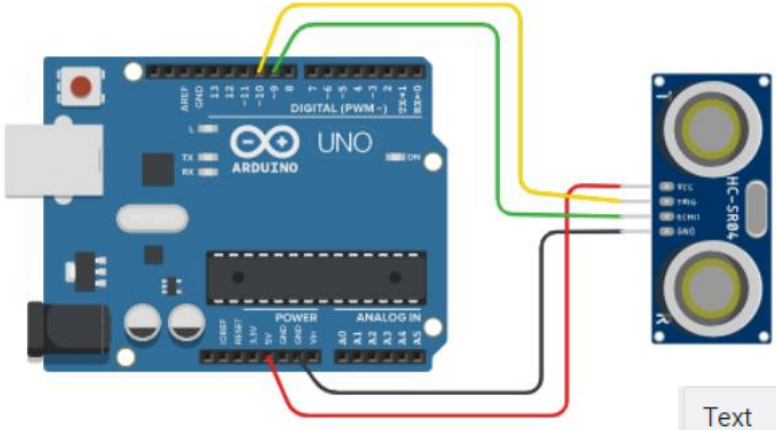

Text | 1 (Arduino Uno R3)

```
void setup() {
  Serial.begin(9600);   //Initialize Serial communication
  pinMode(echo_Pin, INPUT);      //Echo pin as Input
  pinMode(trigger_Pin, OUTPUT);   //Trigger pin as Output
}

void loop() {
  digitalWrite(trigger_Pin, LOW); //Make Trigger pin Low at start
  delay(1);
  digitalWrite(trigger_Pin, HIGH);
  delayMicroseconds(10);  //Make Trigger pin High for 10 uS to st
  digitalWrite(trigger_Pin, LOW);
  duration = pulseIn(echo_Pin, HIGH);  //Save the time it took ul
//  distance = duration * 0.017; //((340*100)/10e6)/2
  distance = duration / 58; //((340*100)/10e6)/2
/* Speed of the sound in Air = 340 m/S
 * multiply it by 100 to get the data in cm
 * divide by 1,000,000 as duration is measured in microseconds
 * divide by 2 as ultrasound signal travels to object and comes b
 */
  Serial.print("Distance (cm) : ");
  Serial.println(distance);
```

Vezje z ultrazvočnim senzorjem SR04

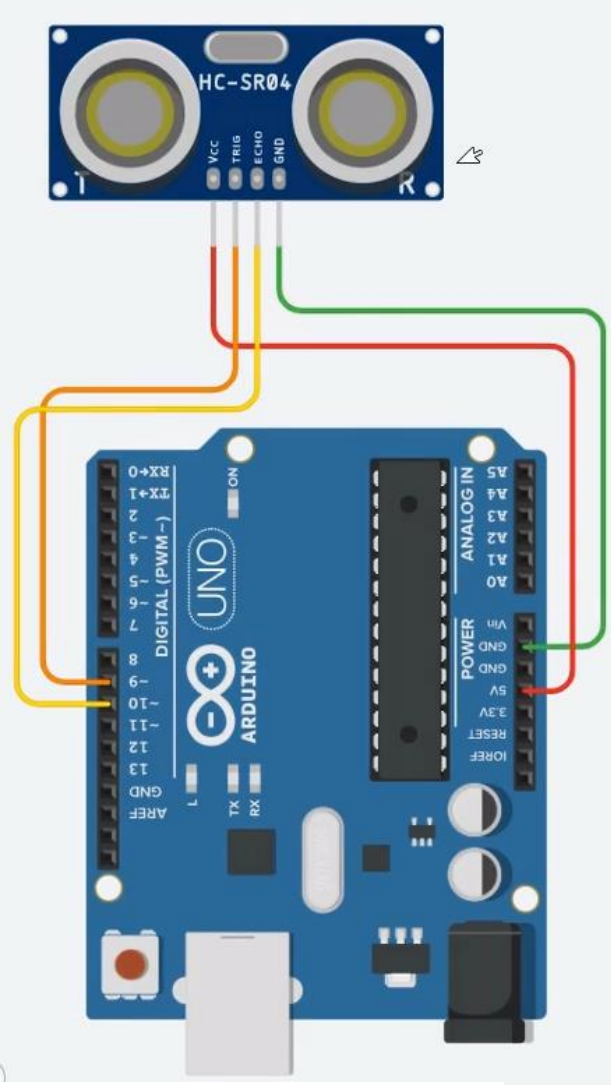


```
const byte trigger_Pin = 9;  //Initialize I/O pins
const byte echo_Pin = 10;
unsigned long duration;  //Since PulseIn return an unsigned Long
unsigned int distance;  //To save the distance

void setup() {
    Serial.begin(9600);   //Initialize Serial communication
    pinMode(echo_Pin, INPUT);      //Echo pin as Input
    pinMode(trigger_Pin, OUTPUT);   //Trigger pin as Output
}

void loop() {
    digitalWrite(trigger_Pin, LOW); //Make Trigger pin Low at start
    delay(1);
    digitalWrite(trigger_Pin, HIGH);
    delayMicroseconds(10);  //Make Trigger pin High for 10 uS to start sending the pulse
    digitalWrite(trigger_Pin, LOW);

   duration = pulseIn(echo_Pin, HIGH);  //Save the time it took ultrasonic wave to come back
   distance = duration * 0.017; //((340*100)/10e6)/2
  /* Speed of the sound in Air = 340 m/s,  multiply it by 100 to get the data in cm
    * divide by 1,000,000 as duration is measured in microseconds
    * divide by 2 as ultrasound signal travels to object and comes back
   */
    Serial.print("Distance (cm) : ");
    Serial.println(distance);
    delay(100);
}
```

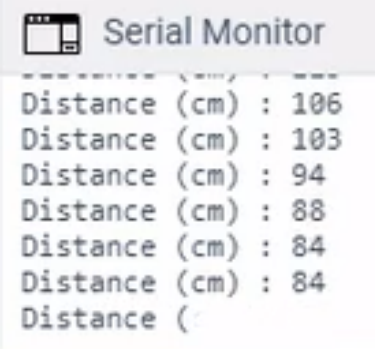

Vezje z ultrazvočnim senzorjem SR04 - program

```
const byte trigger_Pin = 9;  //Initialize I/O pins
const byte echo_Pin = 10;
unsigned long duration;  //Since PulseIn return an unsigned Long
unsigned int distance;  //To save the distance

void setup() {
    Serial.begin(9600);   //Initialize Serial communication
    pinMode(echo_Pin, INPUT);      //Echo pin as Input
    pinMode(trigger_Pin, OUTPUT);   //Trigger pin as Output
}

void loop() {
    digitalWrite(trigger_Pin, LOW); //Make Trigger pin Low at start
    delay(1);
    digitalWrite(trigger_Pin, HIGH);
    delayMicroseconds(10);  //Make Trigger pin High for 10 uS to start sending the pulse
    digitalWrite(trigger_Pin, LOW);

   duration = pulseIn(echo_Pin, HIGH);  //Save the time it took ultrasonic wave to come back
   distance = duration * 0.017; //((340*100)/10e6)/2
  /* Speed of the sound in Air = 340 m/s,  multiply it by 100 to get the data in cm
    * divide by 1,000,000 as duration is measured in microseconds
    * divide by 2 as ultrasound signal travels to object and comes back
   */
    Serial.print("Distance (cm) : ");
    Serial.println(distance);
    delay(100);
}
```

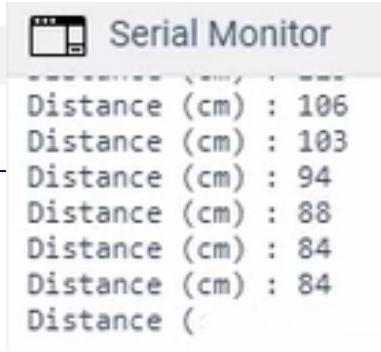

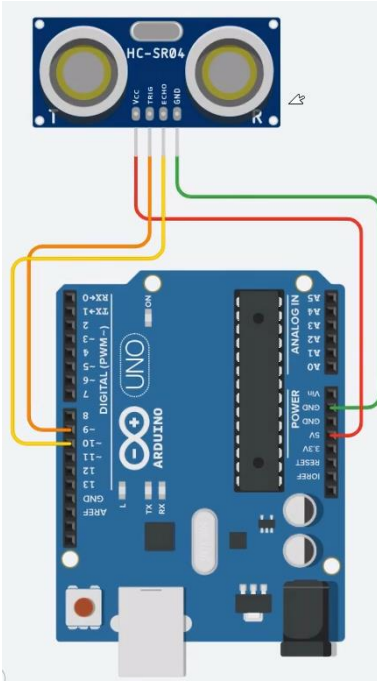

Vezje z ultrazvočnim senzorjem SR04 - program

```
const byte trigger_Pin = 9;  //Initialize I/O pins
const byte echo_Pin = 10;
unsigned long duration;  //Since PulseIn return an unsigned Long
unsigned int distance;  //To save the distance

void setup() {
    Serial.begin(9600);   //Initialize Serial communication
    pinMode(echo_Pin, INPUT);      //Echo pin as Input
    pinMode(trigger_Pin, OUTPUT);   //Trigger pin as Output
}

void loop() {
    digitalWrite(trigger_Pin, LOW); //Make Trigger pin Low at start
    delay(1);
    digitalWrite(trigger_Pin, HIGH);
    delayMicroseconds(10);  //Make Trigger pin High for 10 uS to start sending the pulse
    digitalWrite(trigger_Pin, LOW);

   duration = pulseIn(echo_Pin, HIGH);  //Save the time it took ultrasonic wave to come back
   distance = duration * 0.017; //((340*100)/10e6)/2
  /* Speed of the sound in Air = 340 m/s,  multiply it by 100 to get the data in cm
    * divide by 1,000,000 as duration is measured in microseconds
    * divide by 2 as ultrasound signal travels to object and comes back
   */
    Serial.print("Distance (cm) : ");
    Serial.println(distance);
    delay(100);
}
```

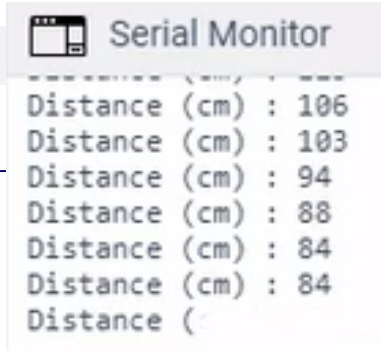

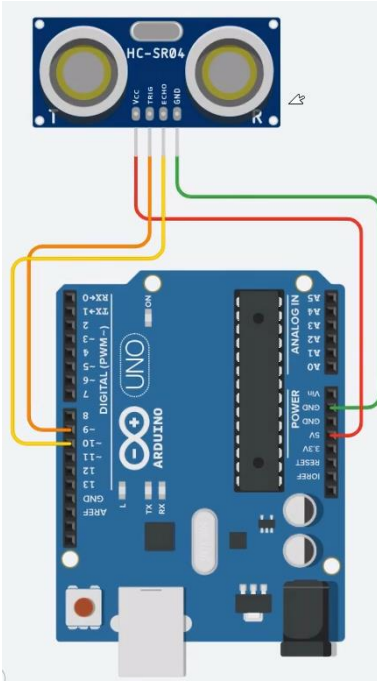

Vezje z ultrazvočnim senzorjem SR04 - program

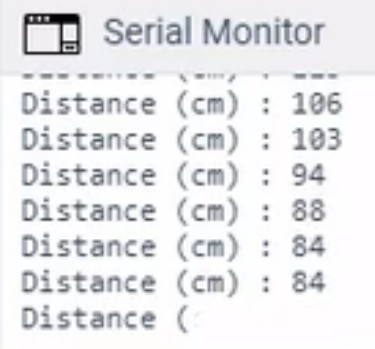


```
const byte trigger_Pin = 9;  //Initialize I/O pins
const byte echo_Pin = 10;
unsigned long duration;  //Since PulseIn return an unsigned Long
unsigned int distance;  //To save the distance

void setup() {
    Serial.begin(9600);   //Initialize Serial communication
    pinMode(echo_Pin, INPUT);      //Echo pin as Input
    pinMode(trigger_Pin, OUTPUT);   //Trigger pin as Output
}

void loop() {
    digitalWrite(trigger_Pin, LOW); //Make Trigger pin Low at start
    delay(1);
    digitalWrite(trigger_Pin, HIGH);
    delayMicroseconds(10);  //Make Trigger pin High for 10 uS to start sending the pulse
    digitalWrite(trigger_Pin, LOW);

   duration = pulseIn(echo_Pin, HIGH);  //Save the time it took ultrasonic wave to come back
   distance = duration * 0.017; //((340*100)/10e6)/2
  /* Speed of the sound in Air = 340 m/s,  multiply it by 100 to get the data in cm
    * divide by 1,000,000 as duration is measured in microseconds
    * divide by 2 as ultrasound signal travels to object and comes back
   */
    Serial.print("Distance (cm) : ");
    Serial.println(distance);
    delay(100);
}
```

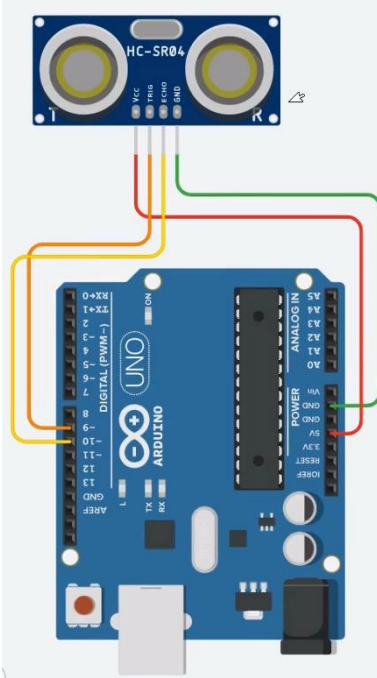

Vezje z ultrazvočnim senzorjem SR04 - program

```
const byte trigger_Pin = 9;  //Initialize I/O pins
const byte echo_Pin = 10;
unsigned long duration;  //Since PulseIn return an unsigned Long
unsigned int distance;  //To save the distance

void setup() {
   Serial.begin(9600);   //Initialize Serial communication
   pinMode(echo_Pin, INPUT);      //Echo pin as Input
   pinMode(trigger_Pin, OUTPUT);   //Trigger pin as Output
}

void loop() {
   digitalWrite(trigger_Pin, LOW); //Make Trigger pin Low at start
   delay(1);
   digitalWrite(trigger_Pin, HIGH);
   delayMicroseconds(10);  //Make Trigger pin High for 10 uS to start sending the pulse
   digitalWrite(trigger_Pin, LOW);

   duration = pulseIn(echo_Pin, HIGH);  //Save the time it took ultrasonic wave to come back
   distance = duration * 0.017; //((340*100)/10e6)/2   or    duration/58
  /* Speed of the sound in Air = 340 m/s,  multiply it by 100 to get the data in cm
   * divide by 1,000,000 as duration is measured in microseconds
   * divide by 2 as ultrasound signal travels to object and comes back
  */
   Serial.print("Distance (cm) : ");
   Serial.println(distance);
   delay(100);
}
```

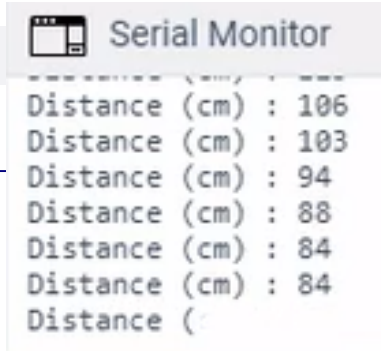

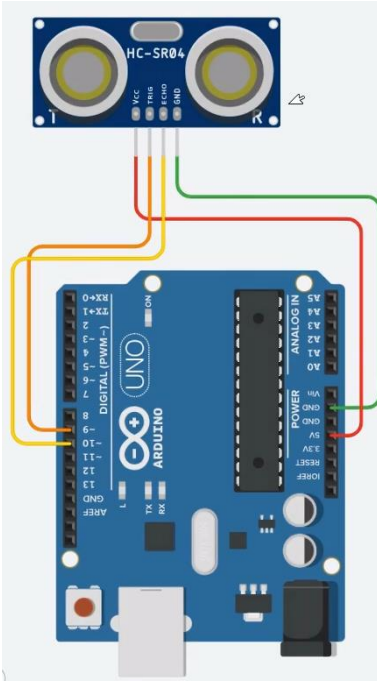

Distance (cm) = Measured Echo Time (in µsec)/58
Distance (inch) = Measured Echo Time (in µsec)/148

Vezje z ultrazvočnim senzorjem SR04 - program

```
const byte trigger_Pin = 9;  //Initialize I/O pins
const byte echo_Pin = 10;
unsigned long duration;  //Since PulseIn return an unsigned Long
unsigned int distance;  //To save the distance

void setup() {
    Serial.begin(9600);   //Initialize Serial communication
    pinMode(echo_Pin, INPUT);      //Echo pin as Input
    pinMode(trigger_Pin, OUTPUT);   //Trigger pin as Output
}

void loop() {
    digitalWrite(trigger_Pin, LOW); //Make Trigger pin Low at start
    delay(1);
    digitalWrite(trigger_Pin, HIGH);
    delayMicroseconds(10);  //Make Trigger pin High for 10 uS to start sending the pulse
    digitalWrite(trigger_Pin, LOW);

   duration = pulseIn(echo_Pin, HIGH);  //Save the time it took ultrasonic wave to come back
   distance = duration * 0.017; //((340*100)/10e6)/2
  /* Speed of the sound in Air = 340 m/s,  multiply it by 100 to get the data in cm
    * divide by 1,000,000 as duration is measured in microseconds
    * divide by 2 as ultrasound signal travels to object and comes back
   */
    Serial.print("Distance (cm) : ");
    Serial.println(distance);
    delay(100);
}
```

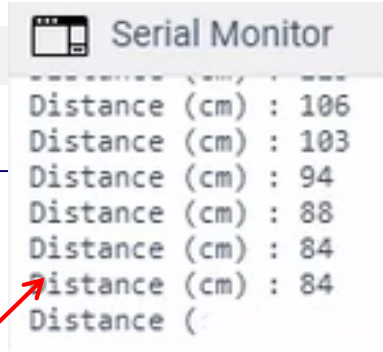

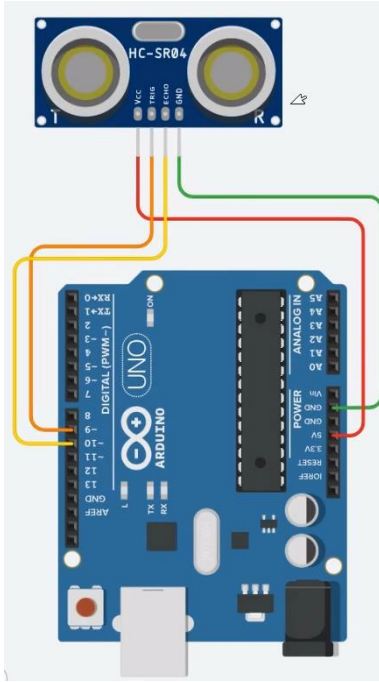

- Arduino :

5V !!!

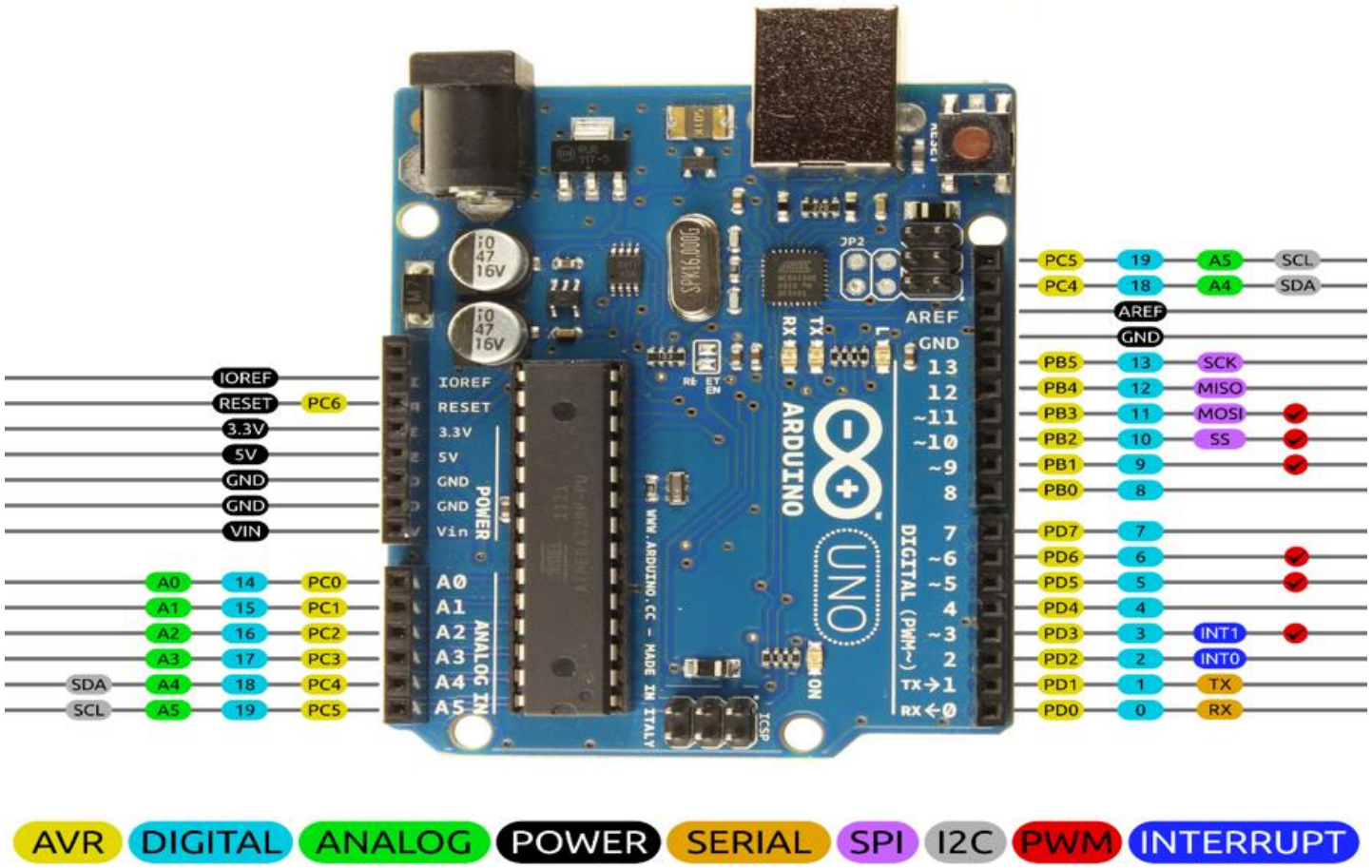
IOREF
RESET
3.3V
5V
GND
GND
VIN
PC6
A0 14 PC0
A1 15 PC1
A2 16 PC2
A3 17 PC3
SDA A4 18 PC4
SCL A5 19 PC5
PC5 19 A5 SCL
PC4 18 A4 SDA
AREF
GND
PB5 13 SCK
PB4 12 MISO
PB3 11 MOSI
PB2 10 SS
PB1 9
PB0 8
PD7 7
PD6 6
PD5 5
PD4 4
PD3 3 INT1
PD2 2 INT0
PD1 1 TX
PD0 0 RX
ARDUINO
UNO
POWER
ANALOG IN
DIGITAL (PWM~)
AVR
DIGITAL
ANALOG
POWER
SERIAL
SPI
I2C
PWM
INTERRUPT

- Viri – Arduino :
  - GitHub :
    - https://github.com/LAPSyLAB/Arduino_projects
  - TinkerCad – Learn – Arduino
    - https://www.tinkercad.com/learn/circuits/projects

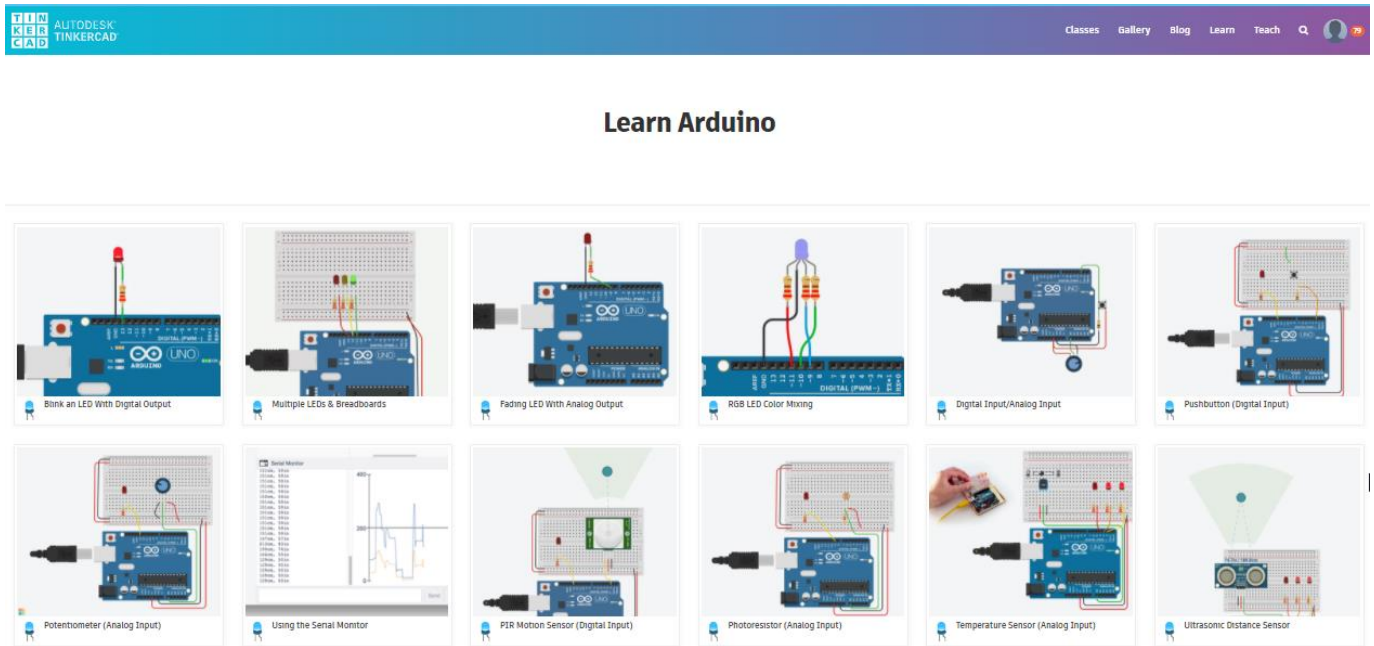

Dodatni viri (po potrebi) :

- GET STARTED PROGRAMMING ARDUINO TODAY!
  - **Learn the 2 most important Arduino programming functions**
  - **Get familiar with Arduino coding**
  - **Understand your Arduino hardware**
  - **Learn the Arduino software setup**
  - **12 engaging video lessons**
  - Z naslova <https://www.programmingelectronics.com/arduino-crash-course/>
- **Coursera: Interfacing with the Arduino**
  - University of California, Irvine
  - Z naslova <https://www.coursera.org/lecture/interface-with-arduino/module-1-introduction-video-VgZmt>

Poglobljena gradiva

- How to Use and Understand the Arduino Reference :: Open Source Hardware Group Arduino Tutorials
  - Z naslova <https://www.youtube.com/watch?time_continue=739&v=f3h4pV_B2Dg&feature=emb_logo>
- LED Blinking code with and without using Arduino library
  - Z naslova <http://electronicswithyou.com/arduino/led-blinking-code-with-and-without-using-arduino-library/>

How to Use and Understand the Arduino Reference (neobvezno)

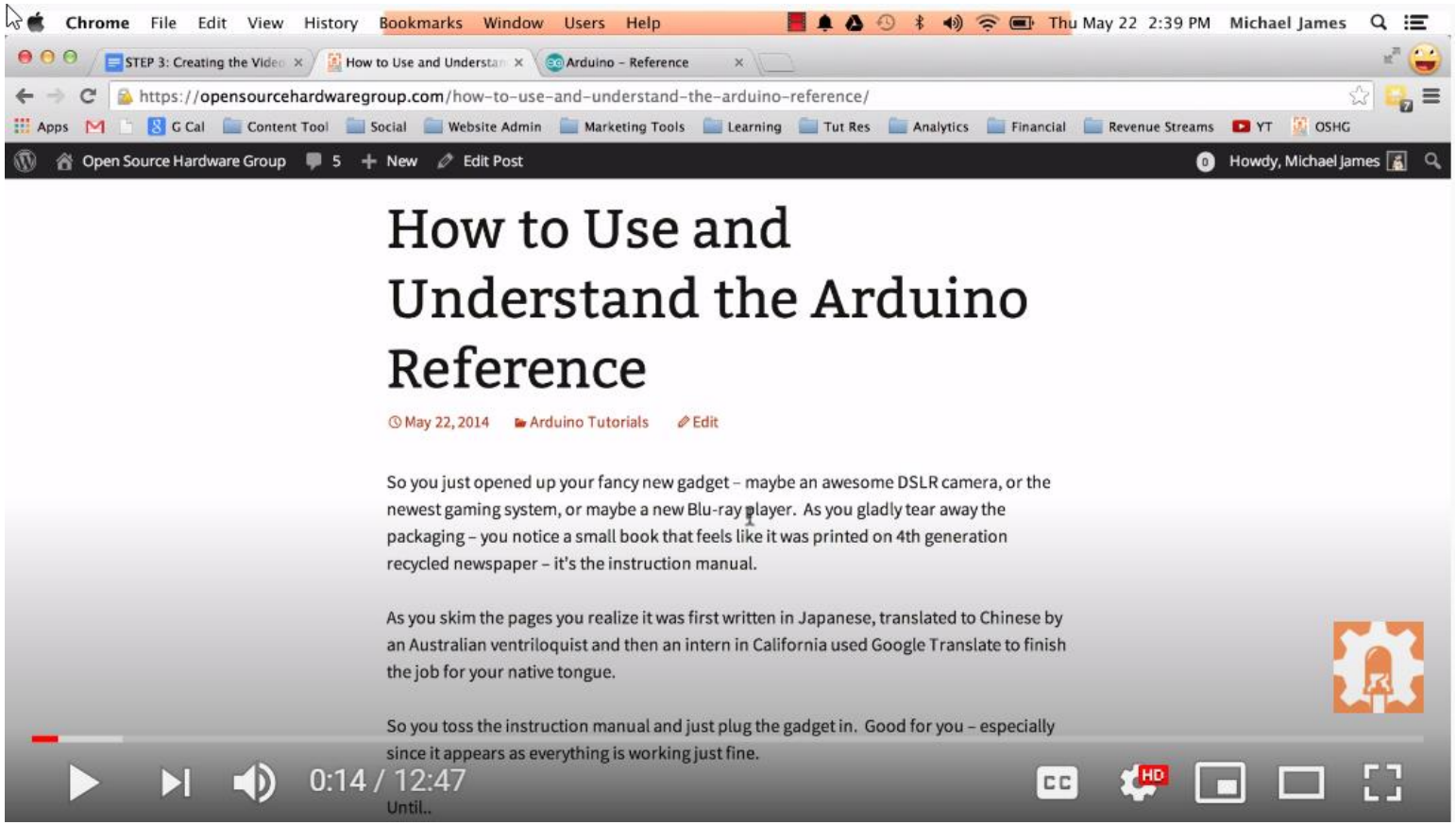

VIN projekt - VP2: TinkerCad, Breadboard, Arduino

- Spoznavanje TinkerCad-a II.
- Breadboard
- TinkerCad + Arduino
- Domača naloga

VIN Projekt Arduino – Primeri 19/20

TinkerCad

Avtomatski dozirnik

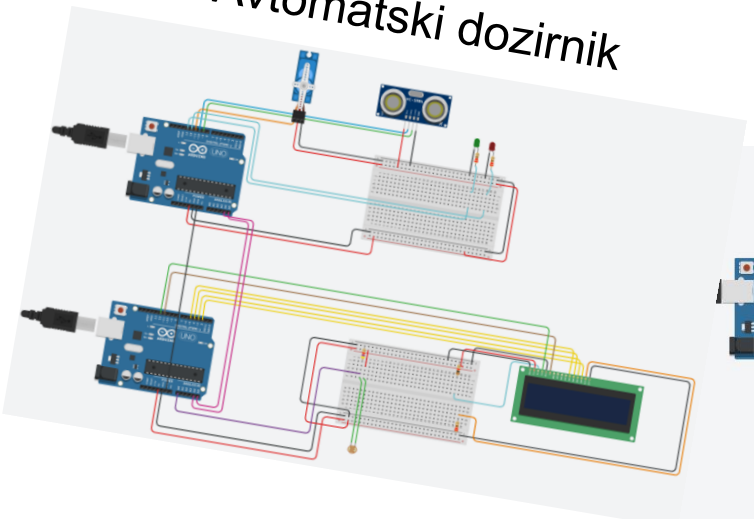

Mini Piano

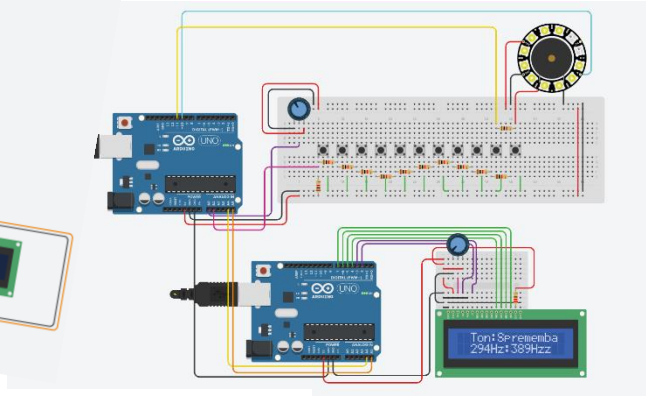

Sledenje

HW izvedba

SENZOR ZA ZAPORNICO

Varnostni sistem za preprečitev zaprtja parkirne zapornice v primeru, da je pod njo objekt.

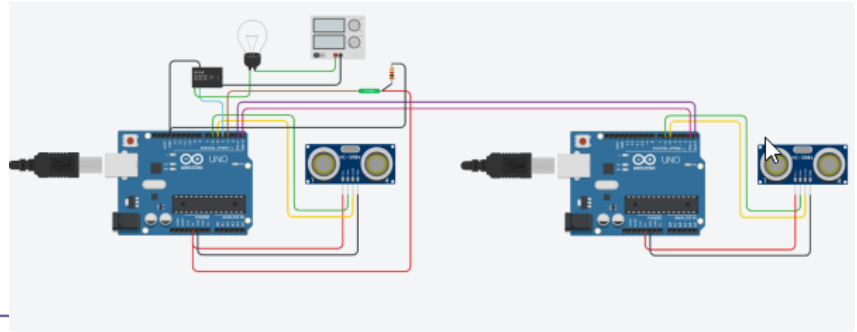

TinkerCad – Domača naloga 2:

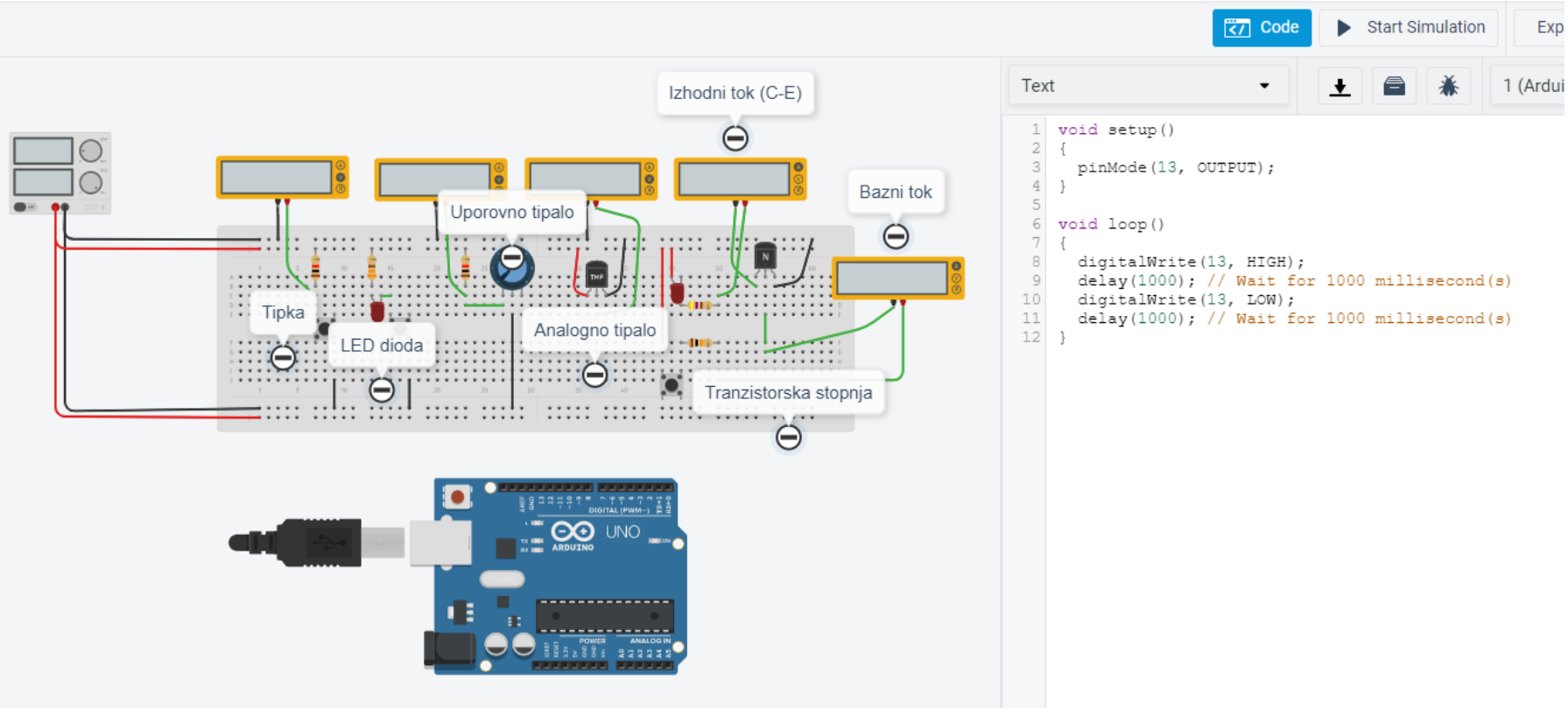

TinkerCad – Domača naloga 2:

- **Spada v sklop poročila z LAB vaj**
- **Naredite sebi zanimivo osnovno vezje(a) z Arduinom in ustrezno kodo**
- **Objavite v OneNote delovnem zvezku**
  - **Collaboration space, razdelek TinkerCad+Arduino**